BOARD OF COUNTY COMMISSIONERS FOR COLUMBIA COUNTY, OREGON

Wednesday, June 24, 2015
10:00 a.m. - Room 308

BOARD MEETING AGENDA

CALL TO ORDER/FLAG SALUTE

MINUTES:

- Minutes, June 17, 2015 Board meeting;
- Minutes, June 17, 2015 Staff meeting.

VISITOR COMMENTS - 5 MINUTE LIMIT

PUBLIC HEARING:

1) Public Hearing, "In the Matter of Authorizing Supplemental Budget Appropriations, Contingency Transfers, Inter-Fund Transfers and Intra-Fund Transfers for Fiscal Year 2014-2015". [Resolution No. 35-3015]

2) Public Hearing, "In the Matter of the Rate Adjustments for Solid Waste Curbside Collection Services in Unincorporated Columbia County". [Order No. 30-2015]

CONSENT AGENDA:

(A) Ratify the Select to Pay for week of 6/22/15.

(B) Approve Personnel Action for Cynthia Zemaitis.

(C) Workers Compensation Application and authorize Jean Ripa to sign.

(D) CIS Property Coverage Proposal and authorize Jennifer Cuellar to sign.

(E) CIS Equipment Breakdown Coverage Proposal and authorize Jennifer Cuellar to sign.

(F) CIS Excess Crime Coverage Proposal and authorize Jennifer Cuellar to sign.

(G) Excess Cyber Security Expense Coverage Proposal and authorize Jennifer Cuellar to sign.

(H) CIS Auto Physical Damage Coverage Proposal and authorize the Chair to sign.

(I) CIS Liability Coverage Proposal and authorize Jennifer Cuellar to sign.

(J) Commercial Insurance Application and authorize Jennifer Cuellar to sign.

(K) Self-insurance Fund ("SIF") Notice and Acknowledgment of Assessable and Financial Condition and authorize Jennifer Cuellar to sign.

(L) Order No. 14-2015, "In the Matter of Conveying Certain Real Property Located at 56510 Old Portland Road, St. Helens, Oregon, to Steven Walter Rice [4N1W19-AD-01400]".

(M) Resolution No. 24-2015, "In the Matter of Declaring a Fiscal Emergency and Modifying Recording Dates under ORS 205.242 for the Columbia County Clerk".

(N) Resolution No. 27-2015, "In the Matter of the Adoption of the Columbia County Budget for Fiscal Year 2015-2016 and the Appropriation and Levying of Ad Valorem Taxes".

(O) Authorize the Land Development Services Director to recruit and fill (1) full time Building Plans Examiner II position.

AGREEMENTS/CONTRACTS/AMENDMENTS:

(P) Contract with Wojahn Roofing for the Re-Roofing Project for the Columbia County Courthouse Annex.

(Q) Amendment #1 to Oregon Department of Education Early Learning Division 2013-2015 County Healthy Families Oregon Medicaid Administrative Activities Intergovernmental Agreement COL1315 #9784 and authorize the Chair to sign.

(R) Intergovernmental Agreement with the City of Scappoose for Work Crew.

(S) Amendment #1 to the Personal Services Contract with Community Action Team, Inc., for Healthy Start Services.

(T) Purchase and Sale Agreement with Steven Walter Rice for 56510 Old Portland Road, St. Helens, Oregon [4N1W19-AD-01400].

(U) Quitclaim Deed to Steven Walter Rice for 56510 Old Portland Road, St. Helens, Oregon [4N1W19-AD-01400] and authorize the Chair to sign.

(V) Intergovernmental Agreement #13195 with the Oregon Youth Authority for Individualized Services and authorize the Chair to sign.

(W) Intergovernmental Agreement #13194 with the Oregon Youth Authority for Juvenile Crime Prevention Basic Services and Diversion Services and authorize the Chair to sign.

DISCUSSION ITEMS:

- Tristan Wood: Grant Award for the Camp Wilkerson Trail Bridge.

COMMISSIONER HEIMULLER COMMENTS:

COMMISSIONER HYDE COMMENTS:

COMMISSIONER FISHER COMMENTS:

EXECUTIVE SESSION:

Pursuant to ORS 192.640(1), the Board of County Commissioners reserves the right to consider and discuss, in either open session or Executive Session, additional subjects which may arise after the agenda is published.

BEFORE THE BOARD OF COUNTY COMMISSIONERS
FOR COLUMBIA COUNTY, OREGON

In the Matter of Authorizing Supplemental Budget Appropriations, Contingency Transfers, Inter-fund Transfers and Intra-Fund Transfers For Fiscal Year 2014-2015	)))))	RESOLUTION NO. 35-2015

WHEREAS, ORS 294.471 permits the County to make one or more supplemental budgets by resolution when there is an occurrence or condition that was not known at the time the original budget was prepared that requires a change in financial planning, or when funds are made available by another unit of federal, state or local government, the availability of which could not be reasonably foreseen when preparing the original budget; and

WHEREAS, if the amended estimated expenditure contained in an individual fund being changed by a supplemental budget differs by more than 10 percent from the budget, as amended, the County shall hold a public hearing on the supplemental budget: and

WHEREAS, the resolution adopting a supplemental budget shall state the need for and purpose and amount of the appropriation; and

WHEREAS, Exhibit A which is attached hereto and is incorporated herein by this reference, sets forth the need, purpose and amount of the appropriation; and

WHEREAS, the amended estimated expenditures of the following individual funds differ by more than 10% from their respective total fund appropriations in the budget most recently amended prior to the supplemental budget: the Park Fund and Inmate Benefit Fund; and

WHEREAS, the County published notice of the hearing on the supplemental budgets on June 17, 2015; at least 5 days before the hearing; and

WHEREAS, a public hearing was held on the supplemental budgets for the above funds on June 24, 2015; and

WHEREAS, the amended estimated expenditures of the following individual funds differ by less than 10 percent from the expenditures in the budget as most recently amended prior to the supplemental budget: General Fund, Fair Fund, Law Library Fund, and Corrections Fund; and

WHEREAS, the General Fund, Park Fund, Fair Fund, and Corrections Fund have experienced occurrences and conditions that were not known when preparing the original budget, which necessitate a change in financial planning, and which will be funded by non-tax monies; and

WHEREAS, the occurrences and conditions are more particularly described in Exhibit A; and

WHEREAS, ORS 294.463 permits the County to make transfers of appropriations within a fund, to make transfers of general operating contingency and to make transfers of appropriations between funds; and

WHEREAS, the need for the intra-fund transfers and transfers of general operating contingency, purpose for the authorized expenditures and amounts to be transferred are described in Exhibit A; and

WHEREAS, the total Fair Fund and Park Fund contingency transfers detailed in Exhibit A are less than 15% of the total appropriations contained in the original budget for the funds; and

WHEREAS, there is sufficient funding available in the Fair Fund and Park Fund contingency category to cover these costs; and

WHEREAS, there is sufficient funding available in other existing appropriation categories to cover the respective intra-fund transfers for the General Fund, Parks Fund, Inmate Benefit Fund, and the Law Library Fund detailed in Exhibit A;

NOW, THEREFORE, IT IS RESOLVED that the supplemental budget actions are hereby approved, and appropriated as detailed in Exhibit A:

$ 69,500 General Fund Unforeseen Occurrences Appropriations
$ 25,000 Park Fund Unforeseen Occurrences Appropriations
$ 11,000 Fair Fund Unforeseen Occurrences Appropriations
$ 52,000 Corrections Fund Unforeseen Occurrences Appropriations
$ 33,000 Park Fund Contingency Transfer
$ 20,000 Fair Fund Contingency Transfer
$ 45,450 General Fund Intra-Fund Transfer
$ 54,500 Parks Fund Intra-Fund Transfer
$ 10,000 Inmate Benefit Fund Intra-Fund Transfer
$ 10,000 Law Library Fund Intra-Fund Transfer

DATED in St. Helens, Oregon this 24th day of June, 2015

BOARD OF COUNTY COMMISSIONERS
FOR COLUMBIA COUNTY, OREGON,

By:_____
Henry Heimuller, Chair

By:_____
Anthony Hyde, Commissioner

By:_____
Earl Fisher, Commissioner

Approved as to form:

By:_____
Office of County Counsel

FY15 Supplemental Budget and Transfer Detail Exhibit A

Request for Intra-fund and Contingency Transfers

Increase Expense Budget		Amount	Decrease Expense Budget		Amount	Note	Supplemental Budget Rule
100-01	Commissioners M&S	7,500	100-01	General Fund Contingency	7,500	Temp employee support needed	Intra-Fund Transfer Resolution (294.463(1))
100-03	Tax Transfers	1,000	100-03	Tax Personnel	1,000	Underbudgeted PERS bond	Intra-Fund Transfer Resolution (294.463(1))
100-04	Clerk Transfers	2,000	100-04	Clerk Personnel	2,000	Underbudgeted PERS bond	Intra-Fund Transfer Resolution (294.463(1))
100-05	Elections Transfers	1,500	100-05	Elections Personnel	1,500	Underbudgeted PERS bond	Intra-Fund Transfer Resolution (294.463(1))
100-06	CCSO Transfers	2,500	100-06	CCSO Personnel	2,500	Underbudgeted PERS bond	Intra-Fund Transfer Resolution (294.463(1))
100-12	DA Transfers	8,000	100-12	DA Personnel	8,000	Underbudgeted PERS bond & retirement payout cost	Intra-Fund Transfer Resolution (294.463(1))
100-18	Juve Transfers	3,000	100-18	Juve Personnel	3,000	Underbudgeted PERS bond	Intra-Fund Transfer Resolution (294.463(1))
100-19	Counsel Transfers	3,000	100-19	Counsel Personnel	3,000	Underbudgeted PERS bond	Intra-Fund Transfer Resolution (294.463(1))
100-37	Court mediation M&S	10,000	213	Law Library	10,000	Law Library is allowed to fund court ordered mediation services	Inter-fund Transfer 294-463(3)
100-49	LDS Transfers	3,000	100-49	LDS Personnel	3,000	Underbudgeted PERS bond	Intra-Fund Transfer Resolution (294.463(1))
100-50	IT Transfers	2,700	100-50	IT Personnel	2,700	Underbudgeted PERS bond	Intra-Fund Transfer Resolution (294.463(1))
100-56	HR Transfers	1,250	100-56	HR Personnel	1,250	Underbudgeted PERS bond	Intra-Fund Transfer Resolution (294.463(1))
202	Parks Transfers	7,500	202	Parks Cap Ex	7,500	Cover un-budgeted inter-fund payments	Intra-Fund Transfer Resolution (294.463(1))
202	Parks M&S	47,000	202	Parks Cap Ex	47,000	Park Host reimbursements	Intra-Fund Transfer Resolution (294.463(1))
202	Parks M&S	33,000	202	Parks Contingency	33,000	Maintenance and Temp services unplanned needs	Contingency Resolution (294.463(2))
204	Fair M&S	20,000	202	Fair Contingency	20,000	Unbudgeted maintenance needs	Contingency Resolution (294.463(2))
210	Inmate Benefit M&S	10,000	210	Inmate Benefit Transfer	10,000	Shifted programming to direct expense, not interfund reimbursement to jail	Intra-Fund Transfer Resolution (294.463(1))
213	Law Library Transfer	10,000	213	Law Library M&S	10,000	Law Library is allowed to fund court ordered mediation services so will make transfer to General Fund	Intra-Fund Transfer Resolution (294.463(1))

Request for New Appropriations due to Higher Revenue than Expected and New Fund Established

Increase Expense Budget		Amount	Increase Revenue Budget		Amount	Note	Supplemental Budget Rule
100-01	Commissioners M&S	7,500	100-01	Reimb	7,500	Higher than anticipated reimburseable expense rev	Funded Unforeseen Condition (294.338(3))
100-06	CCSO Capital	15,000	100-06	CCSO rev	15,000	Donation in Kind of Vehicle	Funded Unforeseen Condition (294.338(3))
100-06	CCSO M&S	10,000	100-06	CCSO rev	10,000	Higher than anticipated program reimbursements	Funded Unforeseen Condition (294.338(3))
100-14	Justice Court M&S	15,000	100-14	Justice Court Fees	15,000	Higher than anticipated fees to cover remittances to State of Oregon	Funded Unforeseen Condition (294.338(3))
100-14	Justice Court Transfers	12,000	100-14	Justice Court Fees	12,000	Higher than anticipated fees to cover interfund transfers to jail, etc.	Funded Unforeseen Condition (294.338(3))
100-37	Court mediation M&S	10,000	100-37	Court Mediation rev	10,000	New funds from law Library cover addl mediation services	Funded Unforeseen Condition (294.338(3))
202	Parks M&S	25,000	202	Parks Useage fees	25,000	Wilkerson useage fees higher than anticipated	Funded Unforeseen Condition (294.338(3))
203	Crctns M&S	52,000	203	Insurance proceeds	52,000	Office water damage expense reimbursed by insurance	Funded Unforeseen Condition (294.338(3))
204	Fair M&S	11,000	204	Fair Restitution	11,000	Auction committee funds retuned to auction cmte	Funded Unforeseen Condition (294.338(3))

FY15 Supplemental Budget

Exhibit A

	Total Fund Budget*	Changes	% Change	Method	Contin-gency	Inter-fund	Unforseen	Intra-Fund	Total Change
General Fund	19,458,539	114,950	0.59%	Resolution	-		69,500	45,450	114,950
Parks Fund	815,685	112,500	13.79%	Public Hearing; Resolution	33,000		25,000	54,500	112,500
Fair Fund	498,223	31,000	6.22%	Resolution	20,000		11,000		31,000
Inmate Benefit Fund	96,326	10,000	10.38%	Public Hearing; Resolution				10,000	10,000
Law Library Fund	187,929	10,000	5.32%	Resolution				10,000	10,000
Correction s Fund	1,907,869	52,000	2.73%	Resolution			52,000		52,000

*May 27 2015 supplemental budget level

15% Contingency Fund Analysis

Fair			Parks		
Total Appropriation	498,223	Resolution fine	Total Appropriation	815,685	Resolution fine
Contingency Transfer	20,000		Contingency Transfer	33,000	
%age	**4.01%**		**%age**	**4.05%**	

BEFORE THE BOARD OF COUNTY COMMISSIONERS

FOR COLUMBIA COUNTY, OREGON

In the Matter of Rate Adjustments for	)	
Curbside Collection Services for	)	ORDER NO. 30-2015
Franchise Areas Covering Rural	)	
Columbia County	)	

WHEREAS, Section 5.01(A) of the Columbia County Solid Waste Management Ordinance ("SWMO") authorizes the Board of County Commissioners, upon its own recommendation or the recommendation of the Solid Waste Advisory Committee (SWAC), to approve and establish rate adjustments; and

WHEREAS, Section 5.01(A)(4) of the SWMO authorizes the Board to increase or decrease rates based on the cost of doing business; and

WHEREAS, Section 5.01(B)(6) of the SWMO provides that in determining rates, the Board shall give due consideration to, among other things, a reasonable rate of return to the franchisee based upon a percentage of gross receipts under the franchise; and

WHEREAS, in May, 2015, the SWAC At-Large Members and County Staff reviewed proposed rate adjustments for curbside collections services by Waste Management, for its rural Scappoose and Vernonia franchise service areas, and Waste Connections (dba Hudson Garbage Service) for its rural St. Helens, Clatskanie, and Rainier franchise service areas; and

WHEREAS, the proposed rate adjustments were supported by Detail Cost Reports (DCRs) submitted by Waste Management and Waste Connections/Hudson. The 2014 DCRs that Waste Management submitted showed operating margins within 8-14% for the rural Scappoose and Vernonia areas. The 2014 DCRs that Waste Connections/Hudson submitted showed operating margins within 8-14% for rural St. Helens and Clatskanie; however, the operating ratio for rural Rainier was 1.3%; and

WHEREAS, the SWAC policy is to recommend a hauler-requested rate adjustment to the Board when the operating margin for the franchise area falls below 8%, and Waste Connections has requested a 6% rate increase; and

WHEREAS, following review of the DCRs, the SWAC voted unanimously to recommend to the Board of County Commissioners a 6% rate increase for curbside collection services for the rural Rainier area; and

WHEREAS, the SWAC also recommended a disposal pass-through rate increase of $0.10 for all franchise areas, in accordance with Section 5.01(A)(4), to incorporate the annual Consumer Price Index (CPI) adjusted rates for disposal at the transfer station; and

WHEREAS, following published notice, the Board held a hearing on June 24, 2015 on the proposed rate adjustments for curbside collection services by franchised haulers for residents and businesses in rural Columbia County; and

WHEREAS, after deliberating on the proposed rate adjustments, the Board determined that

an increase of $.0.10 for all franchise areas is necessary as a pass-through to cover the transfer station's annual CPI-adjusted disposal rate; and

WHEREAS, the Board also determined that the SWAC recommended rate increase for the rural Rainier franchise area is necessary to cover the costs of the waste-disposal program without reducing services to the public; and

WHEREAS, the Board found that the operating margins for all other franchise areas do not justify a rate adjustment at this time, other than to accommodate the CPI-adjusted, pass-through rate for disposal.

NOW, THEREFORE, IT IS HEREBY ORDERED, as follows:

1. In addition to the findings in the staff's Board communication datedMay 22, 2015, attached hereto as Exhibit A and incorporated herein by this reference, the Board adopts the following supplemental findings:

   A. That based on the cost of doing business, an increase in curbside collection rates for the rural Rainier franchise area is justified; and

   B. That the proposed increase in curbside collection rates for the rural Rainier franchise area is just, fair, reasonable, and sufficient to provide proper service to the public; and

   C. That the proposed increase in curbside collection rates to pass through the CPI-adjusted disposal rate increase is justified for all franchise areas and is just, fair, reasonable and sufficient to provide proper service to the public.

2. The Board adopts rate increases in curbside collection services proposed in Exhibit A.

3. The rate increases shall be effective July 1, 2015.

Dated this 24th day of June, 2015.

BOARD OF COUNTY COMMISSIONERS
FOR COLUMBIA COUNTY, OREGON

By:_____
Henry Heimuller, Chair

By:_____
Anthony Hyde, Commissioner

By:_____
Earl Fisher, Commissioner

Approved as to form

By:_____
Office of County Counsel

BOARD COMMUNICATION

FROM THE LAND DEVELOPMENT SERVICES DEPARTMENT
MEETING DATES**: June 24, 2015 RegularBoard Meeting**

TO: **BOARD OF COUNTY COMMISSIONERS**

FROM: Todd Dugdale, Director of Land Development Services

DATE: May 22, 2015

SUBJECT: **PUBLIC HEARING**
2015 Solid Waste Collection Rate Review

SUMMARY:
Each year, the County reviews solid waste collection rates using a uniform Detailed Cost Report(DCR) rate review procedure established in 2011 which is designed to provide the information necessary for the County to make rate setting decisions pursuant to Section 5.01 of the Solid Waste Management Ordinance(**Attachment 1**). Under the DCR procedure, an operating ratio for each collection service area is determined using detailed cost data presented by each collection franchisee in a standard format prescribed by the County. The operating ratio is a measure, expressed as a percentage, of what proportion of a collection franchisee's revenue is left over, before taxes, after paying for the variable costs of providing the service. The County has established a policy that an acceptable operating ratio will be in the range of 8-14% with a target operating ratio of 11%. If the DCR for the previous year indicates an operating ratio which is less than 8%, a rate adjustment to the target 11% may be made. If the operating ratio falls within the 8-14% acceptable range, no rate adjustment would be allowed.

In April 2015, Waste Management and Waste Connections, the two solid waste collection franchisees serving Columbia County, submitted confidential Detailed Cost Reports (DCRs) for calendar year 2014 to the Columbia County Solid Waste Advisory Committee (SWAC) At-Large members and Staff. Confidential detailed cost reports are submitted to the Board under separate cover and are not to be released to the public. A map of the franchise collection service areas is contained in **Attachment 2**. The DCRs were reviewed by SWAC at public meetings on Tuesday, May 5, 2015 and Monday, May 18, 2015. Revisions were made to the DCRs based on SWAC review and a recommendation was forwarded to the Board of Commissioners.

On June 3, 2015, Staff briefed the Board concerning the 2015 Solid Waste Collection rate requests from Waste Management(Scappoose and Vernonia Rural Areas and Rural Drop Box) and Waste Connections dba Hudson's Garbage Service(St. Helens, Rainier and Clatskanie Rural Areas).

The Board referred the rate requests to a public hearing on June 24, 2015. Public notice was provided per Chapter 5 of the Solid Waste Management Ordinance by mailed notice to parties and published twice in the Chronicle, Spotlight, Clatskanie Chief and Independent newspaper at least 10 days prior to the hearing. The proposed rates have also been posted on the County's website. Any written testimony to date is attached.

PROPOSED RATE ADJUSTMENTS:
Rate adjustment proposals for Columbia County's two franchised solid waste collection haulers are described below.

Waste Management Proposed Rate Adjustments:
Proposed rate adjustments for the Waste Management franchise area(Vernonia and Scappoose unincorporated areas)are contained in **Attachment 3** and are summarize below. Waste Management has not proposed any changes to its services to their rural Scappoose and Vernonia customers in 2014. Currently, all Scappoose and Vernonia rural residential customers receive every-other-week (EOW) curbside recycling services in conjunction with solid waste collection, the cost of which is built into the collection rate.

For the **Unincorporated Scappoose Service Area**, the Waste Management DCR indicates a projected operating ratio of 13.7%, within the acceptable operation margin range of 8 to 14%. Therefore no rate increase other than the tipping fee CPI pass through is indicated.

For the **Unincorporated Vernonia Service Area**, the DCR indicates a projected operating ratio of 10.6%, within the acceptable operation margin range of 8 to 14%. Therefore no rate increase other than the tipping fee CPI pass through is indicated.

Typical residential collection service rates under the request would be adjusted as follows:

Franchise Area	Current Services	Current Rate	Rate Increase	Disposal Pass-Thru	New Rate
Scappoose-Rural	**32 Gal. Weekly Recycling EOW**	**$26.81**	**0% $0**	**$.10**	**$26.91**
Vernonia- Rural	**32 Gal. Weekly Recycling EOW**	**$24.84**	0% **$0**	**$.10**	**$26.94**

Waste Connections Proposed Rate Adjustments:
Proposed rate adjustments for the Waste Connections franchise area(Clatskanie, St. Helens and Rainier unincorporated areas) are contained in **Attachment 4** and are summarized below**.** Currently, all St Helens, Clatskanie, and Rainier rural residential customers receive every-other-week (EOW) curbside recycling services in conjunction with solid waste collection, the cost of which is built into the collection rate No new services are proposed for the unincorporated Clatskanie, St. Helens or Rainier service areas in 2015.

For the **Unincorporated St. Helens Service Area**, the Waste Connections DCR indicates a projected operating ratio of 11.9%, within the acceptable operation margin range of 8 to 14%. Therefore no rate increase other than the tipping fee CPI pass through is indicated.

For the **Unincorporated Clatskanie Service Area**, the DCR indicates a projected operating ratio of 9.9%, indicating that no rate adjustment is required.

For the **Unincorporated Rainier Service Area**, the DCR indicates a projected operating ratio of 1.3%, below the acceptable range of 8-14%. The principal reasons for the low operating margin as demonstrated by the DCR are recycling costs and an operating loss in the commercial roll off container business in Rainier. The DCR policy would allow consideration of a rate increase of 9.7% to reach a target 11% operating margin, However, based on concerns over loss of their customer base, Waste Connections is requesting a 6% rate increase.

Typical residential collection service rates under the request would be adjusted as follows:

Franchise Area	Current Services	Current Rate	Rate Increase	Disposal Pass-Thru	New Rate
St. Helens-Rural	**32 Gal. Weekly Recycling EOW**	**$28.09**	**0% $0**	**$.10**	**$28.19**
Clatskanie-Rural	**32 Gal. Weekly Recycling EOW**	**$28.17**	**0% $0**	**$.10**	**$28.27**
Rainier-Rural	**32 Gal. Weekly Recycling EOW**	**$26.11**	**6% $1.56**	**$.10**	**$27.77**

RECOMMENDATION:
Based on a review of revised detailed cost information submitted in support of the franchise hauler requests, the Solid Waste Advisory Committee and Staff recommend approval of the above described collection franchisee rate adjustments. If approved by the Board of Commissioners, the new collection rates including the CPI tipping fee pass through would become effective on July 1, 2015.

ATTACHMENTS:
1. Criteria For Determination of Rates-Chapter 5 of the Solid Waste Management Ordinance
2. Collection Franchise Area Map.
3. Waste Management Proposed Rates for the Scappoose and Vernonia rural service areas.
4. Waste Connections(dba Hudson Garbage Service) Proposed Rates and Deatiled Cost Report for for the St Helens, Clatskanie and Rainier rural service areas.

ATTACHMENT 1

Chapter 5 Columbia County Solid Waste Ordinance

Criteria For Determination of Rates

ATTACHMENT 1

CHAPTER V RATES FOR COLLECTION AND DISPOSAL SERVICE

Section 5.01 Determination Of Rates

(A) Upon recommendation by the Committee or upon its own recommendation, the Board may by ordinance, order, or resolution and after public hearing:

(1) Approve and establish rates filed by applicants for franchises if it finds that such rates are not demonstratively unreasonable and are not substantially higher than those charged generally in the county under similar service requirements and for the same or similar quality of service or it may establish a different rate schedule.

(2) Establish uniform rates throughout the county or establish rates that are uniform within zones based upon the length of haul to disposal sites, concentration of customers, and other factors which may, in the opinion of the Board, justify establishment of rate differentials.

(3) Establish rates for disposal sites that are uniform throughout the county or different rates for each site or class of sites.

(4) Increase or decrease rates based on the cost of doing business.

(5) Establish an interim rate until the Board makes a final determination of the rate for that type of service.

(B) In determining rates, the Board shall make a finding that the rates will be just, fair, reasonable, and sufficient to provide proper service to the public. The Board may consider rates charged by other persons performing the same or similar service in the same or other areas. The Board shall give due consideration to:

(1) The investment in facilities and equipment.

(2) The services of management.

(3) Local wage scales.

(4) The concentration of customers in the area served.

(5) Methods of storage, collection, transportation and disposal, salvage, recycling, or reuse.

(6) A reasonable return to the franchisee, based upon a percentage of gross receipts under the franchise.

(7) The length of haul to disposal facilities.

(8) The cost of disposal.

(9) The use of transfer stations or transfer systems and the added costs.

(10) The cost of alternate methods of disposal.

(11) The future service demands of the service area or disposal site which must be anticipated in equipment, facilities, personnel or land.

(12) Extra charges for special pickups or pickups on days where service is not normally provided on collection route.

(13) Extra charges where the type of character of waste or solid waste, including but not limited to, wastes with peculiarly offensive odors, requires special handling or service.

(14) Extra charges for providing janitorial services on the premises where service is provided.

(15) In addition, with respect to disposal sites, the type of site, whether the site is open to the public and houses, type of wastes disposed of and method of disposal.

(16) Cost of compliance with laws, ordinances or regulations and rules of public agencies or bodies having jurisdiction.

(17) Other factors which may, in the opinion of the Committee and the Board, necessarily affect the rates to be charged.

(C) The Board may require an investigation by the Committee of any proposed rates. For the purpose of making this investigation, the Administrator shall assist the Committee and the Committee is authorized to hold public hearings and to take and receive testimony. Upon completion of such an investigation the Committee shall report the results of any public hearing, its finding and its recommendations to the Board.

(D) Applications for rate adjustments shall be made on the form provided by the Solid Waste Administrator and must provide all information required by the Administrator.

Section 5.02 Rate Preferences Prohibited

(A) No franchisee subject to rate regulation by this ordinance shall give any rate preference to any person, locality or type of solid waste stored, collected, transported or disposed.

(B) Nothing in this section is intended to prevent:

(1) The reasonable establishment of uniform classes of rates based upon length of haul, type of solid wastes stored, collected, transported or disposed of or the number, type and location of customers served or upon other factors as long as such rates are reasonably based upon costs of the particular service and are approved by the Board in the same manner as other rates.

(2) Any person from volunteering service at reduced cost for a charitable, community, civic or benevolent purpose.

Section 5.03 Responsibility For Payment For Charges For Service

Any person who received service shall be responsible for payment for such service. After notice, in writing and mailed to the landlord of any premises, the landlord shall be responsible for payment for service provided to those premises if the tenant does not pay for the service.

Section 5.04 Passing Through Of Certain Rate Changes

(A) Notwithstanding the provisions of Sections 5.01 and 5.02, upon recommendation by the Administrator or upon its own recommendation, the Board may, by order or resolution, approve the passing through to customers on a proportional basis any changes in disposal site and transfer station rates that are authorized by governmental bodies.

(B) In allocating the fee changes in fees and costs to the classes of customers, the Board shall use the following formula:

(1) Residential Customers: An increase or decrease of two and one quarter cents ($.0225) per can for each $1.00 per ton change in fee.

(2) Container (Drop Box) Customers: An increase or decrease of fifteen cents ($.15) per loose yard for each $1.00 per ton change in fee.

(3) Transfer Station Customers: An increase or decrease of $1.00 per ton ($.0005 per pound) for each $1.00 per ton change in fee.

(C) The date that the increased or decreased disposal fees and/or costs are imposed on the franchise holder shall be the same effective date that such fees and/or

costs are imposed on the customers and rates may be adjusted retroactively to accomplish this goal.

ATTACHMENT 2

Collection Franchise Area Map

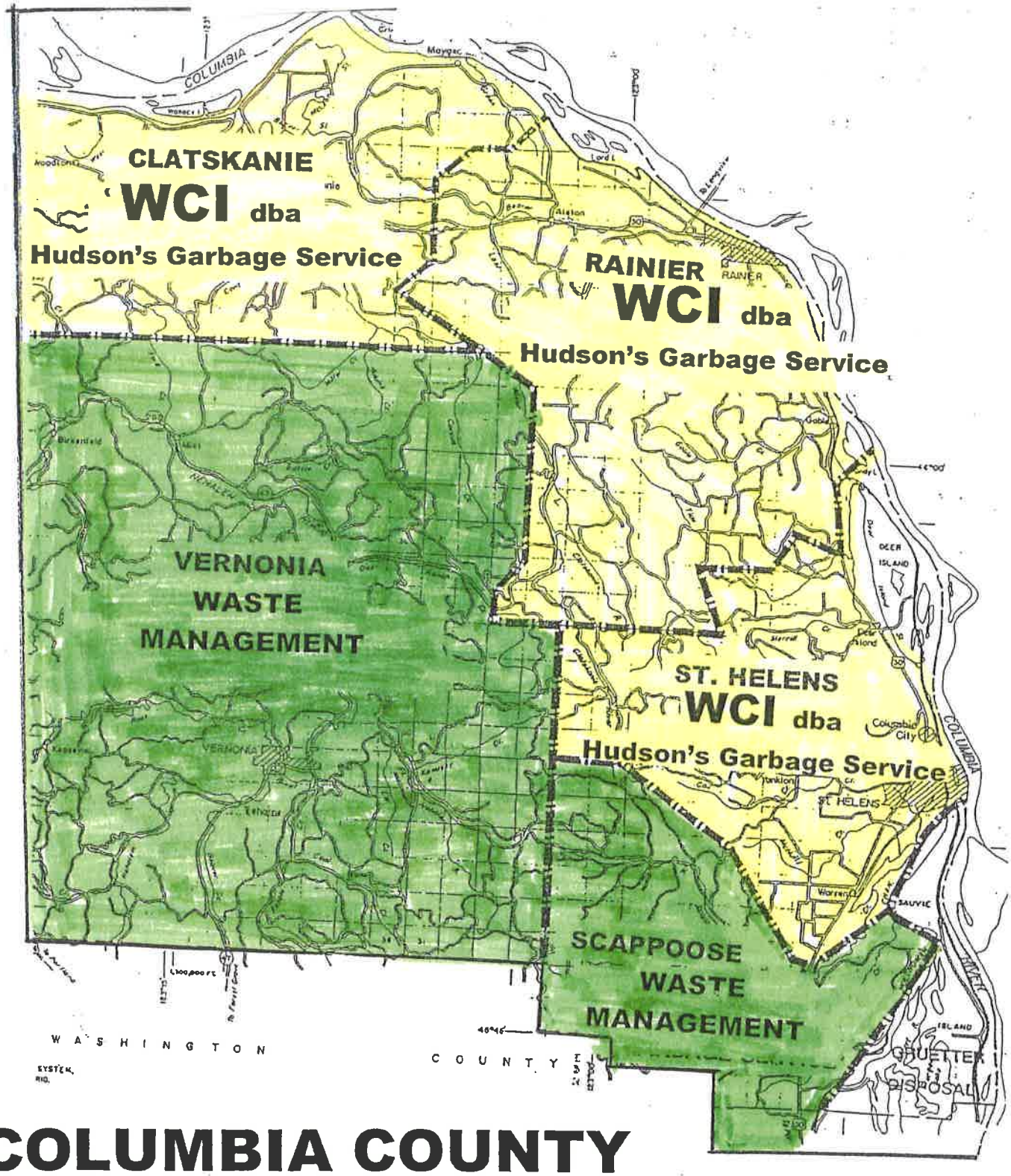

COLUMBIA COUNTY

EXCLUSIVE COLLECTION FRANCHISE AREAS

ATTACHMENT 3

WASTE MANAGEMENT

PROPOSED COLLECTION RATES FOR SCAPPOOSE AND VERNONIA RURAL SERVICE AREAS

Waste Management - Columbia County Operations
EXHIBIT A
Proposed Rates for Columbia County Residential Services
Effective ~~August 1, 2014~~ July 1, 2015

Columbia County - Scappoose County Areas

Weekly Service includes Garbage & Every Other Week Recycling
- WM Provided Roll Cart for Recycling

			0.4%	0.4%
WEEKLY CAN SERVICE	Current Monthly Curbside Rates	Rate Increase	Disposal Pass Through	New Monthly Curbside Rates
One - 32gal can - 1 pickup per week	$ 26.81	$ -	$ 0.10	$ 26.91
Two - 32gal cans - 1 pickup per week	$ 37.54	$ -	$ 0.21	$ 37.75
Three - 32gal can - 1 pickup per week	$ 48.21	$ -	$ 0.31	$ 48.52
Four - 32gal can - 1 pickup per week	$ 58.91	$ -	$ 0.41	$ 59.32
One - 32gal can - EOW pickup	$ 19.80	$ -	$ 0.05	$ 19.85
Each Additional 32gal can	$ 6.84	$ -	$ 0.03	$ 6.88
ONCE A MONTH SERVICE				
Not available				
****WILL CALL SERVICE**				
Will call billed - 32gal can	$ 9.97	$ -	$ 0.20	$ 10.17
RECYCLING ONLY				
Hauler Provided Bins				
Roll Carts - Provided by WM				
32 Gallon Roll Cart	$ 1.31	$ -	$ -	$ 1.31
64 Gallon Roll Cart	$ 1.42	$ -	$ -	$ 1.42
96 Gallon Roll Cart	$ 1.52	$ -	$ -	$ 1.52

Columbia County - Vernonia County Areas

Weekly Service includes Garbage Only

			0.4%	0.4%
WEEKLY CAN SERVICE	Current Monthly Curbside Rates	Rate Increase	Disposal Pass Through	New Monthly Curbside Rates
One - 32gal can - 1 pickup per week	$ 26.84	$ -	$ 0.10	$ 26.94
Two - 32gal cans - 1 pickup per week	$ 42.04	$ -	$ 0.21	$ 42.25
Three - 32gal can - 1 pickup per week	$ 57.24	$ -	$ 0.31	$ 57.54
One - 32gal can - EOW pickup	$ 11.75	$ -	$ 0.05	$ 11.80
Each Additional 32gal can	$ 5.83	$ -	$ 0.03	$ 5.86
ONCE A MONTH SERVICE		0		
Not available		0		
RECYCLING ONLY		0		
Not available		0		
Roll Carts - Provided by WM		0		
32 Gallon Roll Cart	$ 1.36	$ -	$ -	$ 1.36
64 Gallon Roll Cart	$ 1.47	$ -	$ -	$ 1.47
96 Gallon Roll Cart	$ 1.57	$ -	$ -	$ 1.57

Waste Management - Columbia County Operations
EXHIBIT A
Proposed Rates for Columbia County Commercial Services
Effective [redacted]
July 1, 2015

Columbia County Commercial Rates - Vernonia Rural Area

0.00%

Commercial Container Service - Garbage

Monthly Container Rates

Container Size	Current Rate: Number of Stops Per Week 1	Current Rate: Number of Stops Per Week 2	New Rate: Number of Stops Per Week 1	New Rate: Number of Stops Per Week 2
1 Yard	$ 120.89	$ 241.77	$ 121.55	$ 243.10
Extra Pick Up	$ 49.11		$ 49.27	
2 Yard	$ 233.50	$ 467.00	$ 234.83	$ 469.66
Extra Pick Up	$ 74.94		$ 75.24	
3 Yard	$ 281.60	$ 563.19	$ 283.59	$ 567.18
Extra Pick Up	$ 108.16		$ 108.62	
4 Yard	$ 498.80	$ 997.59	$ 501.45	$ 1,002.90
Extra Pick Up	$ 196.45		$ 197.06	

Commercial Container Service - Will Call

Will Call Service

	Current Rate: Dump Fee Per Pull	Current Rate: Rental Fee Per Month	New Rate: Dump Fee Per Pull	New Rate: Rental Fee Per Month
1 Yard	$ 52.22	$ 15.05	$ 52.88	$ 15.21
2 Yard	$ 65.20	$ 19.35	$ 65.20	$ 19.65

Temp Commercial Container Service

Includes Delivery & Removal (additional dumps at Will Call Rates

	Current Rate: Dump Fee Per Pull	Current Rate: Rental Fee Per Month	New Rate: Dump Fee Per Pull	New Rate: Rental Fee Per Month
1 Yard	$ 86.23	$ 15.42	$ 86.39	$ 15.21
2 Yard	$ 111.53	$ 20.08	$ 111.84	$ 19.65

Commercial Rollcart Service

	Old Rate	New Rate
1 - 64 gal rollcart - 1 Pickup Weekly	$ 48.62	$ 49.02
1 - 96 gal rollcart - 1 Pickup Weekly	$ 54.41	$ 55.01

Waste Management - Columbia County Operations

Proposed Rates for Columbia County Commercial Services

EXHIBIT A

Effective ~~August 1, 2014~~ July 1, 2015

Columbia County Commercial Rates - Scappoose Rural Area

0.00%

Commercial Container Service - Garbage

Monthly Container Rates

Container Size	Current Rate: Number of Stops Per Week 1	2	3	New Rate: Number of Stops Per Week 1	2	3
1 Yard	$ 111.03	$ 222.05	$ 333.08	$111.69	$223.38	$335.07
Extra Pick Up	$ 32.87			$33.12		
1.5 Yard	$ 128.44	$ 256.87	$ 385.31	$129.43	$258.87	$388.30
Extra Pick Up	$ 37.39			$37.81		
2 Yard	$ 166.19	$ 332.38	$ 498.57	$167.52	$335.03	$502.55
Extra Pick Up	$ 66.36			$66.91		
3 Yard	$ 249.29	$ 498.57	$ 747.86	$251.28	$502.56	$753.83
Extra Pick Up	$ 99.55			$100.38		
4 Yard	$ 332.38	$ 664.75	$ 997.13	$335.03	$670.07	$1,005.10
Extra Pick Up	$ 132.75			$133.85		

Commercial Container Service - Recycling

Fee for Rental of Recycling Containers - Based on once per week service - Thursday Pickup

Cardboard Recycling Only — $30 fee for rental of 2 Yard Container — $ 30.72

This includes weekly dumping of properly prepared Corrugated Cardboard only.

Cardboard recycling only is permitted in the 2-yard container. At this time, we do not offer commingled or glass recycling in this area.

Commercial Container Service - Will Call

Will Call Service

	Current Rate: Dump Fee Per Pull	Rental Fee Per Month	New Rate: Dump Fee Per Pull	Rental Fee Per Month
1 Yard	$ 44.68	$ 16.86	$44.98	$ 16.86
1.5 Yard	$ 49.91	$ 16.86	$50.37	$ 16.86
2 Yard	$ 83.73	$ 17.53	$84.34	$ 17.53
3 Yard	$ 124.48	$ 28.09	$125.39	$ 28.09

Temp Commercial Container Service

Includes Delivery & Removal (additional dumps at Will Call Rates

	Current Rate: Dump Fee Per Pull	Rental Fee Per Month	New Rate: Dump Fee Per Pull	Rental Fee Per Month
1 Yard	$ 68.17	$ 16.86	$ 68.17	$ 16.86
2 Yard	$ 81.86	$ 17.53	$ 81.86	$ 17.53

Commercial Rollcart Service

	Current Rate	New Rate
1 - 64 gal rollcart - 1 Pickup Weekly	$ 45.41	$ 45.81
1 - 96 gal rollcart - 1 Pickup Weekly	$ 50.89	$ 51.49

Commercial Rollcart Recycling Service

	Current Rate	New Rate
1 - 64 gal rollcart - 1 Pickup Weekly	$ 12.40	$ 12.40
1 - 96 gal rollcart - 1 Pickup Weekly	$ 15.16	$ 15.16

Waste Management - Columbia County Operations

EXHIBIT A

Proposed Rates for Columbia County Drop Box Services

Effective ~~August 1, 2014~~ July 1, 2015

Description of Service	Current Rate		0.00% New Rate
10 YD Haul Rate	**$ 149.15**		**$ 149.15**
20 YD Haul Rate	$ 155.81		$ 155.81
30 YD Haul Rate	**$ 163.17**		**$ 163.17**
Compactor Hauls	$ 296.61		$ 296.61
Mileage Rate	**$ 1.76**		**$ 1.76**
Container Rent			
10 Yard	**$ 89.84**		**$ 89.84**
20 Yard	$ 89.84		$ 89.84
30 Yard	**$ 89.84**		**$ 89.84**
Disposal Rate	$ 85.07		$ 86.04

Columbia County Transfer Station Rate Impact

	Collection	
Current Rate	$ 85.07	
CPI Adjustment %	1.14%	
New Rate	$ 86.04	86.04
Change in Rate	$ 0.97	

Rate Impact @ $1.70 per Ton Increase

	Residential		Commercial				
Container Volume	1 can	2 can	1 Yard	1.5 Yard	2 Yard	3 Yard	4 Yard
Disposal Rate Increase	$ 0.97	$ 0.97	$ 0.97	$ 0.97	$ 0.97	$ 0.97	$ 0.97
Disposal Pass Through	$ 0.09	$ 0.20	$ 0.63	$ 0.95	$ 1.26	$ 1.90	$ 2.53
Franchise Fee	$ 0.00	$ 0.01	$ 0.03	$ 0.05	$ 0.06	$ 0.09	$ 0.13
Rate Impact	$ 0.10	$ 0.21	$ 0.66	$ 1.00	$ 1.33	$ 1.99	$ 2.66

Section 5.04 Passing Through Of Certain Rate Changes

Notwithstanding the provisions of Sections 5.01 and 5.02, upon recommendation by the Administrator or upon its own recommendation, the Board may, by order or resolution, approve the passing through to customers on a proportional basis any changes in disposal site and transfer station rates that are authorized by governmental bodies.

In allocating the fee changes in fees and costs to the classes of customers, the Board shall use the following formula:

Residential Customers: An increase or decrease of two and one quarter cents ($.0225) per can for each $1.00 per ton change in fee.

Container (Drop Box) Customers: An increase or decrease of fifteen cents ($.15) per loose yard for each $1.00 per ton change in fee.

Transfer Station Customers: An increase or decrease of $1.00 per ton ($.0005 per pound) for each $1.00 per ton change in fee.

The date that the increased or decreased disposal fees and/or costs are imposed on the franchise holder shall be the same effective date that such fees and/or costs are imposed on the customers and rates may be adjusted retroactively to accomplish this goal.

ATTACHMENT 4

WASTE CONNECTIONS

(DBA Hudsons Garbage Service)

PROPOSED COLLECTION RATES FOR ST. HELENS, CLATSKANIE AND RAINIER RURAL SERVICE AREAS

EXHIBIT A

HUDSON GARBAGE SERVICE
RATES EFFECTIVE JULY 1, 2015
COLUMBIA COUNTY--RAINIER AREA

		RAINIER COUNTY	
	RATE FREQUENCY	Current Rate	New Rate
RESIDENTIAL			
WEEKLY SERVICE			
1 32 Gallon Can Weekly	PER MONTH	$ 26.11	$ 27.77
2 32 Gallon Cans Weekly	PER MONTH	$ 39.47	$ 42.03
3 32 Gallon Cans Weekly	PER MONTH	$ 54.69	$ 58.26
EVERY-OTHER-WEEK SERVICE			
1 32 Gallon Can Every Other Week	PER MONTH	$ 22.45	$ 23.84
2 32 Gallon Cans Every Other Week	PER MONTH	$ 26.12	$ 27.78
3 32 Gallon Cans Every Other Week	PER MONTH	$ 36.07	$ 38.38
4 32 Gallon Cans Every Other Week	PER MONTH	$ 40.50	$ 43.12
5 32 Gallon Cans Every Other Week	PER MONTH	$ 44.93	$ 47.87
MONTHLY SERVICE			
1 32 gallon 1x Monthly		$ 13.86	$ 14.71
ON-CALL SERVICE			
1 32 Gallon On Call Pickup	PER PICKUP	$ 4.88	$ 5.19
2 32 Gallon On Call Pickup	PER PICKUP	$ 9.76	$ 10.39
3 32 Gallon On Call Pickup	PER PICKUP	$ 14.64	$ 15.58
4 32 Gallon On Call Pickup	PER PICKUP	$ 19.94	$ 21.40
RECYCLE/GREENWASTE RATES			
RECYCLE SERVICE ONLY		$ 6.55	$ 6.94
OTHER CAN SERVICES			
EXTRA CAN (32 OR 35 GAL)	PER PICKUP	$ 5.64	$ 6.00
EOW OFF WEEK	PER PICKUP	$ 4.88	$ 5.19
EXTRA BAG OR BOX	PER PICKUP	$ 3.78	$ 4.03
OVERWEIGHT CAN	PER PICKUP	$ 2.23	$ 2.39
OVERLOADED CAN	PER PICKUP	$ 2.23	$ 2.39
OVERSIZE CAN	PER PICKUP	$ 2.23	$ 2.39
SHARPS CONTAINER (Not Offered to New Customers)	PER PICKUP	$ 26.68	$ 28.28
SPECIAL TRIP-OFF DAY	PER PICKUP	$ 20.00	$ 20.00
ROLL CAN WALK/DRIVE-IN	PER MONTH	$ 4.00	$ 4.00
DRIVE-IN ADDI'L 100 FT. INCREMENTS	PER MONTH	$ 2.00	$ 2.00
SERVICE RESUME/Can REDELIVERY	ONE TIME	$ 25.00	$ 25.00
COLLECTION FEES PAID TO 3RD PARTY COLLECTORS PASSED THROUGH IN FULL	ONE TIME		
RETURNED CHECK FEE (passed through in full)	ONE TIME	$ 20.00	$ 20.00

EXHIBIT A

HUDSON GARBAGE SERVICE
RATES EFFECTIVE JULY 1, 2015
COLUMBIA COUNTY--RAINIER AREA

		RAINIER COUNTY	
	RATE FREQUENCY	Current Rate	New Rate
DROP BOX			
20 YD DROPBOX - HAUL ($300 COD)	PER PICKUP	$ 156.74	$ 166.14
30 YD DROPBOX - HAUL ($350 COD)	PER PICKUP	$ 182.87	$ 193.84
40 YD DROPBOX - HAUL ($375 COD)	PER PICKUP	$ 218.45	$ 231.56
DAILY RENTAL (AFTER 1 WEEK W/NO DUMP)	PER PICKUP	$ 6.27	$ 6.65
20 YARD DEPOSIT DUE ON/PRIOR TO DELIVERY	PER PICKUP	$ 300.00	$ 300.00
30 YARD DEPOSIT DUE ON/PRIOR TO DELIVERY	PER PICKUP	$ 350.00	$ 350.00
40 YARD DEPOSIT DUE ON/PRIOR TO DELIVERY	PER PICKUP	$ 375.00	$ 375.00
DISPOSAL FEE PASSED THROUGH with 5% FRANCHISE FEE	PER PICKUP	$ 89.31	$ 90.30
COMMERCIAL			
Temporary 2 Yard Container	PER PICKUP	$ 64.50	$ 68.66
Container Overload	PER YARD	$ 13.45	$ 14.55
Container Extra Yards	PER YARD	$ 13.45	$ 14.55
Return Trip Charge - Business	PER PICKUP	$ 20.00	$ 20.00
Walk-In - Business	PER MONTH	$ 4.00	$ 4.00
OTHER RATES			
SM FURNITURE	PER PICKUP	$ 13.56	$ 14.40
M/LG FURNITURE	PER PICKUP	$ 28.22	$ 29.94
SM APPLIANCE*	PER PICKUP	$ 13.73	$ 14.58
M/LG APPLIANCE*	PER PICKUP	$ 28.38	$ 30.10
WEEKLY COMMERCIAL CAN SERVICE			
1 32 Gallon Can Weekly Business	PER MONTH	$ 19.56	$ 20.83
2 32 Gallon Cans Weekly Business	PER MONTH	$ 32.92	$ 35.09
3 32 Gallon Cans Weekly Business	PER MONTH	$ 48.14	$ 51.32
4 32 Gallon Cans Weekly Business	PER MONTH	$ 61.97	$ 66.07
95 Gallon Cart Every Other Week Recycle Business	PER MONTH	$ 6.55	$ 6.94
EVERY-OTHER-WEEK COMMERCIAL CAN SERVICE			
1 Can Every Other Week--Business	PER MONTH	$ 15.90	$ 16.90
2 Cans Every Other Week--Business	PER MONTH	$ 19.57	$ 20.84
OTHER COMMERCIAL CAN SERVICE			
1 32G OAM Commercial			
1 32G OC Commercial			
Overfill/Overweight Can Business	PER PICKUP	$ 2.23	$ 2.39
Oversize Can Business	PER PICKUP	$ 2.23	$ 2.39

EXHIBIT A

HUDSON GARBAGE SERVICE
RATES EFFECTIVE JULY 1, 2015
COLUMBIA COUNTY--RAINIER AREA

		RAINIER COUNTY	
	RATE FREQUENCY	Current Rate	New Rate
CONTAINER SERVICE			
1 Yard Container Weekly Service = 6.3 32 gal cans	PER MONTH	$ 98.33	$ 104.87
1 Yard Every Other Week Service	PER MONTH	$ 68.02	$ 72.42
1.5 Yard Container Weekly Service = 9.4 32 gal cans	PER MONTH	$ 136.10	$ 145.22
1.5 Yard 3x Weekly Service	PER MONTH	$ 454.69	$ 484.84
1.5 Yard Every Other Week Service	PER MONTH	$ 94.06	$ 100.18
2 Yard Container Weekly Service = 12.6 32 gal cans	PER MONTH	$ 186.85	$ 199.34
2 Yard Container 2x Weekly Service	PER MONTH	$ 250.74	$ 268.34
2 Yard Every Other Week Service	PER MONTH	$ 129.17	$ 137.56
3 Yard Container Weekly Service = 18.9 32 gal cans	PER MONTH	$ 272.20	$ 290.45
3 Yard Container 2x Weekly Service	PER MONTH	$ 480.21	$ 512.85
4 Yard Container Weekly Service	PER MONTH	$ 352.39	$ 376.09
4 Yard Every Other Week Service	PER MONTH	$ 184.33	$ 196.67
6 Yard Container Weekly Service	PER MONTH	$ 501.78	$ 535.72

EXHIBIT A

CLATSKANIE DISPOSAL SERVICE
RATES EFFECTIVE JULY 1, 2015
COLUMBIA COUNTY--CLATSKANIE AREA

		CLATSKANIE COUNTY	
	RATE FREQUENCY	Current Rate	New Rate
RESIDENTIAL			
WEEKLY SERVICE			
1 32 Gallon Can Weekly	PER MONTH	$ 28.17	$ 28.27
2 32 Gallon Cans Weekly	PER MONTH	$ 47.90	$ 48.09
3 32 Gallon Cans Weekly	PER MONTH	$ 68.19	$ 68.48
4 32 Gallon Cans Weekly	PER MONTH	$ 88.55	$ 88.93
5 32 Gallon Cans Weekly	PER MONTH	$ 108.90	$ 109.38
EVERY-OTHER-WEEK SERVICE			
1 32 Gallon Can Every Other Week	PER MONTH	$ 17.89	$ 17.94
2 32 Gallon Cans Every Other Week	PER MONTH	$ 28.67	$ 28.77
3 32 Gallon Cans Every Other Week	PER MONTH	$ 39.48	$ 39.62
MONTHLY SERVICE			
32 gallon 1x Monthly	PER MONTH	$ 8.90	$ 8.92
2 32 gallon 1x Monthly	PER MONTH	$ 15.75	$ 15.79
3 32 gallon 1x Monthly	PER MONTH	$ 22.57	$ 22.64
4 32 gallon 1x Monthly	PER MONTH	$ 28.15	$ 28.24
ON-CALL SERVICE			
32 Gallon On Call Pickup	PER PICKUP	$ 8.90	$ 8.92
2 32 Gallon On Call Pickup	PER PICKUP	$ 15.75	$ 15.79
3 32 Gallon On Call Pickup	PER PICKUP	$ 22.57	$ 22.64
4 32 Gallon On Call Pickup	PER PICKUP	$ 29.38	$ 29.47
RECYCLE/GREENWASTE RATES			
RECYCLE SERVICE ONLY	PER MONTH	$ 8.53	$ 8.53
RESI RECYCLE WITH GARBAGE	PER MONTH	$ 4.53	$ 4.53
OTHER CAN SERVICES			
EXTRA CAN (32 OR 35 GAL)	PER PICKUP	$ 6.83	$ 6.85
EOW OFF WEEK	PER PICKUP	$ 8.90	$ 8.92
EXTRA BAG OR BOX	PER PICKUP	$ 4.28	$ 4.30
OVERWEIGHT CAN	PER PICKUP	$ 2.51	$ 2.53
OVERLOADED CAN	PER PICKUP	$ 2.51	$ 2.53
OVERSIZE CAN	PER PICKUP	$ 2.51	$ 2.53
SHARPS CONTAINER (Not Offered to New Customers)	PER PICKUP	$ 23.77	$ 23.77
SPECIAL TRIP-OFF DAY	PER PICKUP	$ 20.00	$ 20.00
ROLL CAN WALK/DRIVE-IN	PER MONTH	$ 4.00	$ 4.00
DRIVE-IN ADDI'L 100 FT. INCREMENTS	PER MONTH	$ 2.00	$ 2.00
SERVICE RESUME/Can REDELIVERY	ONE TIME	$ 25.00	$ 25.00
COLLECTION FEES PAID TO 3RD PARTY COLLECTORS PASSED THROUGH IN FULL	ONE TIME		
RETURNED CHECK FEE (passed through in full)	ONE TIME	$ 20.00	$ 25.00

EXHIBIT A

CLATSKANIE DISPOSAL SERVICE
RATES EFFECTIVE JULY 1, 2015
COLUMBIA COUNTY--CLATSKANIE AREA

		CLATSKANIE COUNTY	
	RATE FREQUENCY	Current Rate	New Rate
DROP BOX			
20 or 30 YD DROP BOX - HAUL ($414 COD)	PER PICKUP	$ 298.79	$ 298.79
40 YD DROPBOX - HAUL ($450 COD)	PER PICKUP	$ 334.64	$ 334.64
DAILY RENTAL (AFTER 1 WEEK W/NO DUMP)	PER PICKUP	$ 7.13	$ 7.13
DISPOSAL FEE PASSED THROUGH with 5% FRANCHISE FEE	PER PICKUP	$ 89.31	$ 90.30

EXHIBIT A

CLATSKANIE DISPOSAL SERVICE
RATES EFFECTIVE JULY 1, 2015
COLUMBIA COUNTY--CLATSKANIE AREA

		CLATSKANIE COUNTY	
	RATE FREQUENCY	Current Rate	New Rate
COMMERCIAL			
TEMP 2YD CONT	PER PICKUP	$ 72.25	$ 72.40
XTRA PER DAY	PER DAY	$ 2.38	$ 2.38
CONTAINER OVERLOAD	PER PICKUP	$ 14.70	$ 14.85
CONTAINER PER/EXTRA YD	PER PICKUP	$ 14.70	$ 14.85
OTHER RATES			
TIRE under 16" no/rim	PER PICKUP	$ 5.95	$ 5.96
TIRE under 16" w/rim	PER PICKUP	$ 14.26	$ 14.27
BATTERY	PER PICKUP	$ 5.95	$ 5.96
HOT WATER HEATER	PER PICKUP	$ 31.80	$ 31.85
SM MATTRESS	PER PICKUP	$ 10.37	$ 10.41
M/LG MATTRESS	PER PICKUP	$ 19.26	$ 19.31
SM FURNITURE	PER PICKUP	$ 15.14	$ 15.15
M/LG FURNITURE	PER PICKUP	$ 31.57	$ 31.59
SM APPLIANCE*	PER PICKUP	$ 15.38	$ 15.42
M/LG APPLIANCE*	PER PICKUP	$ 31.80	$ 31.85
WEEKLY COMMERCIAL CAN SERVICE W/RECYCLING			
1 32 Gallon Can Weekly Business	PER MONTH	$ 28.17	$ 28.27
EVERY-OTHER-WEEK COMM CAN SVC W/RECYCLING			
1 Can Every Other Week--Business	PER MONTH	$ 17.89	$ 17.94
OTHER COMMERCIAL CAN SERVICE			
32 gallon 1x Monthly Business	PER MONTH	$ 8.90	$ 8.92
32 Gallon On Call Pickup Business	PER MONTH	$ 8.90	$ 8.92
Overfill/Overweight Can Business	PER PICKUP	$ 2.51	$ 2.53
Commercial Recycling Service	PER MONTH	$ 4.53	$ 4.53
CONTAINER SERVICE W/ RECYCLING			
1 Yard Container Weekly Service = 6.3 32 gal cans	PER MONTH	$ 158.63	$ 159.27
1 Yard Every Other Week Service	PER MONTH	$ 86.87	$ 87.19
1YD OAM (not offered to new customers)	PER MONTH	$ 43.47	$ 43.62
1Yard On Call Pickup (not offered to new customers)	PER PICKUP	$ 38.25	$ 38.40
1.5 Yard Container Weekly Service = 6.3 32 gal cans	PER MONTH	$ 227.79	$ 228.75
1.5 Yard Every Other Week Service	PER MONTH	$ 122.08	$ 122.56
1.5YD OAM (not offered to new customers)	PER MONTH	$ 60.58	$ 60.80
1.5YD OPU (not offered to new customers)	PER PICKUP	$ 55.54	$ 55.76
2 Yard Container Weekly Service = 12.6 32 gal cans	PER MONTH	$ 297.79	$ 299.07
*Each additional	PER MONTH	$ 274.81	$ 276.09
2 Yard Container 2x Weekly Service	PER MONTH	$ 595.59	$ 598.14
2 Yard Every Other Week Service	PER MONTH	$ 158.33	$ 158.97
2YD OAM (not offered to new customers)	PER MONTH	$ 77.42	$ 77.71
2YD OPU (not offered to new customers)	PER PICKUP	$ 72.99	$ 73.28
4 Yard Container 1x Weekly Service	PER MONTH	$ 521.93	$ 524.48

EXHIBIT A

HUDSON GARBAGE SERVICE
RATES EFFECTIVE JULY 1, 2015
COLUMBIA COUNTY--ST. HELENS AREA

	RATE FREQUENCY	ST. HELENS COUNTY Current Rate	ST. HELENS COUNTY New Rate
RESIDENTIAL			
WEEKLY SERVICE			
1 32 Gallon Can Weekly	PER MONTH	$ 28.09	$ 28.19
2 32 Gallon Cans Weekly	PER MONTH	$ 44.09	$ 44.28
3 32 Gallon Cans Weekly	PER MONTH	$ 60.09	$ 60.38
4 32 Gallon Cans Weekly	PER MONTH	$ 76.05	$ 76.43
5 32 Gallon Cans Weekly	PER MONTH	$ 92.10	$ 92.58
6 32 Gallon Cans Weekly	PER MONTH	$ 108.14	$ 108.71
EVERY-OTHER-WEEK SERVICE			
1 32 Gallon Can Every Other Week	PER MONTH	$ 21.42	$ 21.47
2 32 Gallon Cans Every Other Week	PER MONTH	$ 34.13	$ 34.23
3 32 Gallon Cans Every Other Week	PER MONTH	$ 48.57	$ 48.71
4 32 Gallon Cans Every Other Week	PER MONTH	$ 63.02	$ 63.21
MONTHLY SERVICE			
1 32 gallon 1x Monthly	PER MONTH	$ 8.97	$ 8.99
2 32 gallon 1x Monthly	PER MONTH	$ 13.00	$ 13.04
3 32 gallon 1x Monthly	PER MONTH	$ 17.06	$ 17.13
4 32 gallon 1x Monthly	PER MONTH	$ 21.13	$ 21.22
1 35 gallon 1x Monthly	PER MONTH	$ 8.97	$ 8.99
ON-CALL SERVICE			
1 32 Gallon On Call Pickup	PER PICKUP	$ 9.67	$ 9.69
2 32 Gallon On Call Pickup	PER PICKUP	$ 15.12	$ 15.16
3 32 Gallon On Call Pickup	PER PICKUP	$ 19.90	$ 19.97
RECYCLE/GREENWASTE RATES			
RECYCLE SERVICE ONLY	PER MONTH	$ 8.37	$ 8.37
RESI RECYCLE WITH GARBAGE	PER MONTH	$ 4.45	$ 4.45
OTHER CAN SERVICES			
EXTRA CAN (32 OR 35 GAL)	PER PICKUP	$ 6.76	$ 6.78
EOW OFF WEEK	PER PICKUP	$ 9.67	$ 9.69
EXTRA BAG OR BOX	PER PICKUP	$ 3.39	$ 3.41
OVERWEIGHT CAN	PER PICKUP	$ 2.75	$ 2.77
OVERLOADED CAN	PER PICKUP	$ 2.75	$ 2.77
OVERSIZE CAN	PER PICKUP	$ 2.75	$ 2.77
SHARPS CONTAINER (Not Offered to New Customers)	PER PICKUP	$ 26.21	$ 26.21
SPECIAL TRIP-OFF DAY	PER PICKUP	$ 20.00	$ 20.00
ROLL CAN WALK/DRIVE-IN	PER MONTH	$ 4.00	$ 4.00
DRIVE-IN ADDI'L 100 FT. INCREMENTS	PER MONTH	$ 2.00	$ 2.00
SERVICE RESUME/Can REDELIVERY	ONE TIME	$ 25.00	$ 25.00
COLLECTION FEES PAID TO 3RD PARTY COLLECTORS PASSED THROUGH IN FULL	ONE TIME		
RETURNED CHECK FEE (passed through in full)	ONE TIME	$ 20.00	$ 20.00

EXHIBIT A

HUDSON GARBAGE SERVICE
RATES EFFECTIVE JULY 1, 2015
COLUMBIA COUNTY--ST. HELENS AREA

	RATE FREQUENCY	ST. HELENS COUNTY Current Rate	ST. HELENS COUNTY New Rate
COMMERCIAL			
TEMP 2YD CONT	PER PICKUP	$ 76.65	$ 76.94
XTRA PER DAY	PER DAY	$ 2.63	$ 2.63
CONTAINER OVERLOAD	PER PICKUP	$ 16.51	$ 16.80
CONTAINER PER/EXTRA YD	PER PICKUP	$ 16.51	$ 16.80
OTHER RATES			
TIRE under 16" no/rim	PER PICKUP	$ 6.55	$ 6.56
TIRE under 16" w/rim	PER PICKUP	$ 15.72	$ 15.73
BATTERY	PER PICKUP	$ 6.55	$ 6.56
HOT WATER HEATER	PER PICKUP	$ 35.24	$ 35.29
SM MATTRESS	PER PICKUP	$ 11.47	$ 11.51
M/LG MATTRESS	PER PICKUP	$ 17.16	$ 17.21
SM FURNITURE	PER PICKUP	$ 16.78	$ 16.79
M/LG FURNITURE	PER PICKUP	$ 35.01	$ 35.03
SM APPLIANCE*	PER PICKUP	$ 17.05	$ 17.09
M/LG APPLIANCE*	PER PICKUP	$ 35.24	$ 35.29
WEEKLY COMMERCIAL CAN SERVICE W/RECYCLING			
1 32 Gallon Can Weekly Business	PER MONTH	$ 28.09	$ 28.19
2 32 Gallon Can Weekly Business	PER MONTH	$ 44.09	$ 44.28
3 32 Gallon Can Weekly Business	PER MONTH	$ 60.09	$ 60.38
4 32 Gallon Can Weekly Business	PER MONTH	$ 76.05	$ 76.43
5 32 Gallon Can Weekly Business	PER MONTH	$ 92.10	$ 92.58
7 32 Gallon Can Weekly Business	PER MONTH	$ 123.96	$ 124.63
1 95 Gallon Cart Weekly Business	PER MONTH	$ 60.09	$ 60.38
2 95 Gallon Cart Weekly Business	PER MONTH	$ 92.44	$ 93.01
3 95 Gallon Cart Weekly Business	PER MONTH	$ 126.36	$ 127.22
EVERY-OTHER-WEEK COMMERCIAL CAN SVC W/ RECYCLING			
1 Can Every Other Week--Business	PER MONTH	$ 21.42	$ 21.47
OTHER COMMERCIAL CAN SERVICE			
32 gallon 1x Monthly Business	PER MONTH	$ 8.97	$ 8.99
32 Gallon On Call Pickup Business	PER PICKUP	$ 9.67	$ 9.69
Overfill/Overweight Can Business	PER PICKUP	$ 2.75	$ 2.78
Commercial Recycling Service	PER MONTH	$ 4.45	$ 4.45

EXHIBIT A

HUDSON GARBAGE SERVICE
RATES EFFECTIVE JULY 1, 2015
COLUMBIA COUNTY--ST. HELENS AREA

	RATE FREQUENCY	ST. HELENS COUNTY Current Rate	New Rate
CONTAINER SERVICE W/ RECYCLING			
1 Yard Container Weekly Service = 6.3 32 gal cans	PER MONTH	$ 124.05	$ 124.69
*Each additional	PER MONTH	$ 113.39	$ 114.03
1 Yard Container 2 x Weekly Service	PER MONTH	$ 226.91	$ 228.19
*Each additional	PER MONTH	$ 208.26	$ 209.54
1.5 Yard Container 3 x Weekly Service	PER MONTH	$ 330.97	$ 332.88
*Each additional	PER MONTH	$ 312.04	$ 313.95
1.5 Yard Container 4 x Weekly Service	PER MONTH	$ 452.78	$ 455.33
1.5 Yard Container 5 x Weekly Service	PER MONTH	$ 565.96	$ 569.15
1 Yard Every Other Week Service	PER MONTH	$ 69.77	$ 70.09
1YD OAM (not offered to new customers)	PER MONTH	$ 34.57	$ 34.72
1Yard On Call Pickup (not offered to new customers)	PER PICKUP	$ 35.64	$ 35.79
1.5 Yard Container Weekly Service = 9.5 32 gal cans	PER MONTH	$ 168.25	$ 169.21
*Each additional	PER MONTH	$ 157.43	$ 158.39
1.5 Yard Container 2 x Weekly Service	PER MONTH	$ 316.23	$ 318.14
*Each additional	PER MONTH	$ 307.79	$ 309.70
1.5 Yard Container 3 x Weekly Service	PER MONTH	$ 462.18	$ 465.05
*Each additional	PER MONTH	$ 426.53	$ 429.40
1.5 Yard Every Other Week Service	PER MONTH	$ 132.87	$ 133.35
1.5YD OAM (not offered to new customers)	PER MONTH	$ 66.07	$ 66.29
1.5YD OPU (not offered to new customers)	PER PICKUP	$ 43.03	$ 43.25
2 Yard Container Weekly Service = 12.6 32 gal cans	PER MONTH	$ 221.30	$ 222.58
*Each additional	PER MONTH	$ 204.93	$ 206.21
2 Yard Container 2x Weekly Service	PER MONTH	$ 410.10	$ 412.65
*Each additional	PER MONTH	$ 377.56	$ 380.11
2 Yard Container 3x Weekly Service	PER MONTH	$ 599.31	$ 603.14
*Each additional	PER MONTH	$ 552.87	$ 556.70
2 Yard Every Other Week Service	PER MONTH	$ 167.55	$ 168.19
2YD OAM (not offered to new customers)	PER MONTH	$ 0.73	$ 1.02
2 Yard On Call (not offered to new customers)	PER PICKUP	$ 52.37	$ 52.66
3 Yard Container 1x Weekly Service	PER MONTH	$ 308.20	$ 310.11
3 Yard Container 2x Weekly Service	PER MONTH	$ 543.15	$ 546.98
3 Yard Container 3x Weekly Service	PER MONTH	$ 777.84	$ 783.58
3 Yard Container 4x Weekly Service	PER MONTH	$ 1,012.53	$ 1,020.19
3 Yard Container 5x Weekly Service	PER MONTH	$ 1,247.29	$ 1,256.86
4 Yard Container 1x Weekly Service	PER MONTH	$ 379.91	$ 382.46
4 Yard Container 2x Weekly Service	PER MONTH	$ 706.31	$ 711.41
4 Yard Container 3x Weekly Service	PER MONTH	$ 1,016.32	$ 1,023.98
4 Yard Container 4x Weekly Service	PER MONTH	$ 1,326.33	$ 1,336.54
4 Yard Container 5x Weekly Service	PER MONTH	$ 1,636.41	$ 1,649.17
5 Yard Container 1x Weekly Service	PER MONTH	$ 448.80	$ 451.99
5 Yard Container 2x Weekly Service	PER MONTH	$ 879.36	$ 885.74
5 Yard Container 3x Weekly Service	PER MONTH	$ 1,309.60	$ 1,319.17
5 Yard Container 4x Weekly Service	PER MONTH	$ 1,739.83	$ 1,752.59
5 Yard Container 5x Weekly Service	PER MONTH	$ 2,170.14	$ 2,186.09

EXHIBIT A

HUDSON GARBAGE SERVICE
RATES EFFECTIVE JULY 1, 2015
COLUMBIA COUNTY--ST. HELENS AREA

		ST. HELENS COUNTY	
	RATE FREQUENCY	Current Rate	New Rate
7 Yard Container 1x Weekly Service	PER MONTH	$ 684.94	$ 689.41
7 Yard Container 2x Weekly Service	PER MONTH	$ 1,177.76	$ 1,186.69
7 Yard Container 3x Weekly Service	PER MONTH	$ 1,670.10	$ 1,683.50
7 Yard Container 4x Weekly Service	PER MONTH	$ 2,241.07	$ 2,258.94
7 Yard Container 5x Weekly Service	PER MONTH	$ 2,654.89	$ 2,677.22

BEFORE THE BOARD OF COUNTY COMMISSIONERS
FOR COLUMBIA COUNTY, OREGON

In the Matter of Conveying Certain Real Property Located at 56510 Old Portland Road, St. Helens, Oregon, to Steven Walter Rice [Tax Map ID No. 4N1W19-AD-01400]	))))	**ORDER NO. 14 - 2015**

WHEREAS, certain real property in Columbia County, Oregon, which has been assigned Tax Account No. 8709 and Tax Map ID No. 4N1W19-AD-01400 (the "Property"), was foreclosed upon for non-payment of ad valorem real property taxes in *Columbia County* v. *Ayers, William J., et al.,* Case No. 10-2595; and

WHEREAS, the Property is more particularly described as:

PARCEL I: Beginning at the Southwest corner of tract of land conveyed by N. F. Baker and Maggie E. Baker, his wife, to Lucinda Blanchard on February 16, 1892, which deed was duly recorded at Page 518, Book M, deed records of Columbia County, Oregon, thence running in a Southerly course 65 feet to a point; thence in an Easterly course and parallel with the South boundary line of said Lucinda Blanchard tract 100 feet; thence in a Northerly course and parallel with the West boundary line of said described tract of land 65 feet to a point in the South boundary line of said Lucinda Blanchard tract of land; thence West along the South boundary line of said Lucinda Blanchard tract of land 100 feet to the place of beginning, in Columbia County, Oregon.

PARCEL 2: All that portion of the Donation Land Claim of Garner T. Foster, in Section 19, Township 4 North, Range 1 West of the Willamette Meridian, Columbia County, Oregon, described as follows: beginning at the Southwest corner of tract conveyed to James Bacon by W. J. Fullerton and wife on July 28, 1891, which deed was duly recorded at Page 56, Book M, deed records of Columbia County, Oregon; thence Easterly on the South boundary of said tract 230 feet; thence Northerly and parallel with the Western boundary line 25 feet; thence Westerly and parallel with the Southern boundary line 230 feet; thence Southerly on the West boundary line 25 feet to the place of beginning; also the following tract of land to-wit: commencing at the Northwest corner of tract of land conveyed by M. Fisk and Josephine Fisk, his wife, to N. F. Baker on November 14, 1890 which deed was recorded at Page 52, Book M, deed records; thence in an Easterly course on the Northern boundary line of said tract 230 feet; thence in a Southerly direction parallel with the Western boundary 50 feet; thence Westerly and parallel with the Northern boundary line 230 feet; thence in a Northerly direction on the Western boundary line 50 feet to the place of beginning; and

WHEREAS, the Property is deemed surplus to the County's needs and the highest and

best use is to an adjoining property owner; and

WHEREAS, the County offered the property for sheriff's sale at auction on December 4, 2014, with a minimum bid of $45,496,and no offers were received; and

WHEREAS, because the Property was not sold at auction on December 4, 2014, pursuant to ORS 275.200, the Property can now be sold by private sale for no less than 15 percent of the minimum bid set under ORS 275.110 for the sheriff's sale; and

WHEREAS, on February 24, 2015, Steven Walter Rice, an adjoining property owner, submitted an offer to the County to purchase this parcel in the amount of $6,824.40, tendering that amount to purchase the Property and the sum of $66 to cover recording and handling fees; and

NOW, THEREFORE, IT IS HEREBY ORDERED as follows:

1. Pursuant to ORS 275.200, the Board finds the offer of Mr. Rice to be a reasonable offer for the property and hereby authorizes the sale of the above-described Property to Steven Walter Rice for $6,824.40.

2. WHEREAS, the Board of County Commissioners shall enter into a Purchase and Sale Agreement with Steven Walter Rice in substantially the form which is attached hereto as Exhibit 1 and incorporated herein by this reference.

3. The Board of County Commissioners shall execute the Quitclaim Deed in substantially the form which is attached to the Purchase and Sale Agreement as Exhibit A, and by this reference incorporated herein, to convey the Property to Steven Walter Rice for the sum of $6,824.40, plus recording and handling fees, receipt of which is hereby acknowledged, when the terms and conditions of the Purchase and Sale Agreement have been met.

4. The original Quitclaim Deed shall be recorded in the County Clerk deed records for the sum of $66.

DATED this ____ day of June, 2015.

BOARD OF COUNTY COMMISSIONERS
FOR COLUMBIA COUNTY, OREGON

By: _____
Henry Heimuller, Chair

By: _____
Anthony Hyde, Commissioner

By: _____
Earl Fisher, Commissioner

Approved as to form:

By: _____
Office of County Counsel

EXHIBIT 1

PURCHASE AND SALE AGREEMENT

Dated: June 10, 2015

BETWEEN **COLUMBIA COUNTY**, a political subdivision of the State of Oregon ("Seller")

AND **STEVEN WALTER RICE** ("Buyer")

RECITALS

WHEREAS, on October 13, 2010, *nunc pro tunc* October 7, 2010, the Circuit Court of the State of Oregon for the County of Columbia entered of record the General Judgment in *Columbia County v. Ayers, William J., et al., Case No. 10-2595*; and

WHEREAS, on October 8, 2012, pursuant to that General Judgment, Seller acquired certain foreclosed real property, including a certain parcel of land situated near Warren, Oregon; and

WHEREAS, said foreclosed property is currently assigned Tax Map ID No. 4N1W19-AD-01400, is located at 56510 Old Portland Road, St. Helens, and is legally described as:

PARCEL I: Beginning at the Southwest corner of tract of land conveyed by N. F. Baker and Maggie E. Baker, his wife, to Lucinda Blanchard on February 16, 1892, which deed was duly recorded at Page 518, Book M, deed records of Columbia County, Oregon, thence running in a Southerly course 65 feet to a point; thence in an Easterly course and parallel with the South boundary line of said Lucinda Blanchard tract 100 feet; thence in a Northerly course and parallel with the West boundary line of said described tract of land 65 feet to a point in the South boundary line of said Lucinda Blanchard tract of land; thence West along the South boundary line of said Lucinda Blanchard tract of land 100 feet to the place of beginning, in Columbia County, Oregon.

PARCEL 2: All that portion of the Donation Land Claim of Garner T. Foster, in Section 19, Township 4 North, Range 1 West of the Willamette Meridian, Columbia County, Oregon, described as follows: beginning at the Southwest corner of tract conveyed to James Bacon by W. J. Fullerton and wife on July 28, 1891, which deed was duly recorded at Page 56, Book M, deed records of Columbia County, Oregon; thence Easterly on the South boundary of said tract 230 feet; thence Northerly and parallel with the Western boundary line 25 feet; thence Westerly and parallel with the Southern boundary line 230 feet; thence Southerly on the West boundary line 25 feet to the place of beginning; also the following tract of land to-wit: commencing at the Northwest corner of tract of land conveyed by M. Fisk and Josephine Fisk, his wife, to N. F. Baker on November 14, 1890 which deed was recorded at Page 52, Book M, deed records; thence in an Easterly course on the Northern boundary line of said tract 230 feet; thence in a Southerly direction parallel with the Western boundary 50 feet;

thence Westerly and parallel with the Northern boundary line 230 feet; thence in a Northerly direction on the Western boundary line 50 feet to the place of beginning.

(hereinafter, the "Property"); and

WHEREAS, the County offered the Property for sale at auction on December 4, 2014, with a minimum bid of $45,496, and no offers were received; and

WHEREAS, pursuant to ORS 275.200, the County may sell and convey the Property by private sale for not less than 15% of the minimum bid set for the Property at the Sheriff's sale; and

WHEREAS, the Columbia County Board of Commissioners has agreed to sell the Property to Buyer on the terms and conditions set forth herein.

AGREEMENT

In consideration of the terms and conditions hereinafter stated. Buyer agrees to buy and Seller agrees to sell, on the following terms, the Property.

1. Purchase Price. The total purchase price shall be $6,824.40.. Payment shall be made by cash, money order or cashier's check, which shall be delivered to Cynthia Zemaitis, 230 Strand, Room 301, St. Helens, Oregon 97051.

2. Earnest Money. There shall be no earnest money.

3. Buyer's Conditions to Closing. Buyer's obligation to purchase the Property is conditioned on the following occurring not later than the Closing Date as defined in Section 8, below, unless otherwise specified or waived by Buyer.

Seller shall convey the Property to Buyer pursuant to a Quitclaim Deed at closing, a copy of which is attached hereto as Exhibit A. Seller expressly excepts from this conveyance and reserves unto Seller, and to Seller's heirs and assigns, all minerals (including, but not by way of limitation, oil, gas, sulfur, coal, lignite and uranium) in, under and that may be produced from the Property to be conveyed.

These conditions are solely for Buyer's benefit and may be deemed satisfied or waived only by Buyer in her sole discretion. If Buyer has not given written notice of satisfaction or waiver of these conditions by the Closing Date, this Agreement shall be terminated, except those provisions which by their terms survive.

4. Seller's Conditions to Closing. Seller's obligation to sell the Property is conditioned upon the following occurring not later than the Closing Date as defined in Section 8, below, unless otherwise specified or waived by Seller:

A. Buyer shall deliver to Seller by cash, money order, or cashier's check the amount of the purchase price plus recording and handling fees in the amount of $66.00.

B. Buyer shall deliver to Seller a deposit in the amount of Ten Thousand Dollars ($10,000) to secure performance of Section 11 of this Agreement. The deposit shall be delivered in cash, money order, or cashier's check to Cynthia Zemaitis, 230 Strand, Room 301, St. Helens, Oregon 97051.

C. Buyer shall deliver to Seller any other funds due to be paid under this Agreement no later than the Closing Date.

D. Buyer agrees to release, defend, indemnify and hold harmless the County, its officers, agents and employees, successors and assigns from all claims, suits, actions, liability, damage, loss, cost or expense, including but not limited to attorney's fees, that the County, its officers, agents and employees, successors and assigns may sustain or incur on account of: (1) any damage to or destruction of any property that the County may own or in which it may have an interest; (2) any damage to or destruction of any property belonging to any other person, firm or corporation; (3) injury to or death of any person or persons as a result of any errors or omissions or other negligent, reckless or intentionally wrongful acts of Buyer, his heirs, successors, assigns and/or invited guests arising in any manner out of Buyer's use or possession of the Property, and (4) environmental liability arising from the Property. This condition shall survive closing and shall not be merged with the deed.

These conditions are solely for Seller's benefit and may be deemed satisfied or waived only by Seller in its sole discretion. If Seller has not given written notice of satisfaction or waiver of these conditions by the Closing Date, this Agreement shall be terminated, except those provisions which by their terms survive.

5. Failure of Conditions at Closing. In the event that any of the conditions set forth in Sections 3 or 4 above are not timely satisfied or waived, for a reason other than the default of the Buyer or the Seller under this Agreement, this Agreement, the escrow, and the rights and obligations of the Buyer and the Seller shall terminate, in which case Buyer agrees to immediately remove all persons and personal property from the Property.

6. Default; Remedies. Nothing in this Agreement is intended to require Seller to Close the sale. Seller shall be entitled to decline to close at any time before the closing documents are signed.

7. Closing of Sale. The sale shall be closed as soon as possible but no later than July 2, 2015, (the "Closing Date"). The sale shall be "closed" when the document conveying title is recorded and funds are disbursed to Seller. At closing, Seller shall convey title to the Property to Buyer by Quitclaim Deed, subject to the Seller's reservation of mineral rights in and to the Property.

8. Closing Costs; Prorates. Reserved.

9. Possession. Buyer shall be entitled to exclusive possession of the Property as of the Closing Date.

10. Condition of Property. Buyer shall acquire the Property "AS IS" with all faults and Buyer shall rely on the results of his own inspection and investigation in acquisition of the Property, and not upon any representation made by the Seller. Buyer acknowledges and agrees that the Property contains accumulated solid waste, and that the County has not inspected or tested the solid waste or performed other environmental testing. The County makes no representations about the cost to remove the solid waste, or any other environmental liability. Buyer acknowledges and agrees that Buyer is solely responsible for the cost to abate any solid waste accumulation or other cost associated with the Property. This paragraph shall survive closing and shall not merge with the deed.

11. Solid Waste Removal. No later than 90 days from the closing date, Buyer shall remove all accumulated solid waste from the Property, and shall submit proof to the Seller that all solid waste violations associated with the Property have been cured. Proof shall be in the form of a letter from the Columbia County Department of Land Development Services stating that all violations have been cured, delivered to Cynthia Zemaitis, 230 Strand, Room 301, St. Helens, Oregon 97051. If such proof is submitted within 90 days, Seller will return Buyer's deposit within 14 days of the date proof is delivered. If proof is not delivered within 90 days, Buyer shall be in default in the performance of this Agreement, Seller may enter the premises for purposes of removing any remaining solid waste, and the deposit shall be forfeited to Seller in its entirety. Until proof is delivered, Seller, its officers, agents, and employees, shall have a license to enter upon the property or to cause a contractor to enter upon the property for the purpose of inspection for solid waste violations and for the purpose of removing any remaining solid waste upon twenty-four (24) hours written notice, posted on the property. This paragraph shall survive closing and shall not merge with the deed.

12. General Provisions.

A. Notices. Unless otherwise specified, any notice required or permitted in, or related to, this Agreement must be in writing and signed by the party to be bound. Any notice or payment will be deemed given when personally delivered or delivered by facsimile transmission with electronic confirmation of delivery, or will be deemed given on the day following delivery of the notice by reputable overnight courier or though mailing in the U.S. mail, postage prepaid, by the applicable party to the address of the other party shown in this Agreement, unless that day is a Saturday, Sunday, or legal holiday, in which event it will be deemed delivered on the next following business day. If the deadline under this Agreement for delivery of a notice or payment is a Saturday, Sunday, or legal holiday, such last day will be deemed extended to the next following business day.

The notice addresses are as follows:

FOR SELLER:
Board of County Commissioners
c/o Natural Resource Administrator
230 Strand, Room 301
St. Helens, OR 97051

FOR BUYER:
Steven Walter Rice
28963 Huber Road
Scappoose, OR 97056

B. Assignment. Neither party may assign this Agreement.

C. Attorneys' Fees. In the event a suit, action, arbitration, other proceeding of any nature whatsoever to enforce or interpret this Agreement, each Party shall be responsible for its own costs and expenses, including attorney's fees. This paragraph shall survive closing and shall not merge with the deed.

D. Statutory Disclaimers.

"THE PROPERTY DESCRIBED IN THIS INSTRUMENT MAY NOT BE WITHIN A FIRE PROTECTION DISTRICT PROTECTING STRUCTURES. THE PROPERTY IS SUBJECT TO LAND USE LAWS AND REGULATIONS THAT, IN FARM OR FOREST ZONES, MAY NOT AUTHORIZE CONSTRUCTION OR SITING OF A RESIDENCE AND THAT LIMIT LAWSUITS AGAINST FARMING OR FOREST PRACTICES, AS DEFINED IN ORS 30.930, IN ALL ZONES. BEFORE SIGNING OR ACCEPTING THIS INSTRUMENT, THE PERSON TRANSFERRING FEE TITLE SHOULD INQUIRE ABOUT THE PERSON'S RIGHTS, IF ANY, UNDER ORS 195.300, 195.301 AND 195.305 TO 195.336 AND SECTIONS 5 TO 11, CHAPTER 424, OREGON LAWS 2007, SECTIONS 2 TO 9 AND 17, CHAPTER 855, OREGON LAWS 2009, AND SECTIONS 2 TO 7, CHAPTER 8, OREGON LAWS 2010. BEFORE SIGNING OR ACCEPTING THIS INSTRUMENT, THE PERSON ACQUIRING FEE TITLE TO THE PROPERTY SHOULD CHECK WITH THE APPROPRIATE CITY OR COUNTY PLANNING DEPARTMENT TO VERIFY THAT THE UNIT OF LAND BEING TRANSFERRED IS A LAWFULLY ESTABLISHED LOT OR PARCEL, AS DEFINED IN ORS 92.010 OR 215.010, TO VERIFY THE APPROVED USES OF THE LOT OR PARCEL, TO VERIFY THE EXISTENCE OF FIRE PROTECTION FOR STRUCTURES AND TO INQUIRE ABOUT THE RIGHTS OF NEIGHBORING PROPERTY OWNERS, IF ANY, UNDER ORS 195.300, 195.301 AND 195.305 TO 195.336 AND SECTIONS 5 TO 11, CHAPTER 424, OREGON LAWS 2007, SECTIONS 2 TO 9 AND 17, CHAPTER 855, OREGON LAWS 2009, AND SECTIONS 2 TO 7, CHAPTER 8, OREGON LAWS 2010."

"BEFORE SIGNING OR ACCEPTING THIS INSTRUMENT, THE PERSON TRANSFERRING FEE TITLE SHOULD INQUIRE ABOUT THE PERSON'S RIGHTS, IF ANY, UNDER ORS 195.300, 195.301 AND 195.305 TO 195.336 AND SECTIONS 5 TO 11, CHAPTER 424, OREGON LAWS 2007, SECTIONS 2 TO 9 AND 17, CHAPTER 855, OREGON LAWS 2009, AND SECTIONS 2 TO 7, CHAPTER 8, OREGON LAWS 2010. THIS INSTRUMENT DOES NOT ALLOW USE OF THE PROPERTY DESCRIBED IN THIS INSTRUMENT IN VIOLATION OF APPLICABLE LAND USE LAWS AND REGULATIONS. BEFORE SIGNING OR ACCEPTING THIS INSTRUMENT, THE PERSON ACQUIRING FEE TITLE TO THE PROPERTY SHOULD CHECK WITH THE APPROPRIATE CITY OR COUNTY PLANNING DEPARTMENT TO VERIFY THAT THE UNIT OF LAND BEING TRANSFERRED IS A

LAWFULLY ESTABLISHED LOT OR PARCEL, AS DEFINED IN ORS 92.010 OR 215.010, TO VERIFY THE APPROVED USES OF THE LOT OR PARCEL, TO DETERMINE ANY LIMITS ON LAWSUITS AGAINST FARMING OR FOREST PRACTICES, AS DEFINED IN ORS 30.930, AND TO INQUIRE ABOUT THE RIGHTS OF NEIGHBORING PROPERTY OWNERS, IF ANY, UNDER ORS 195.300, 195.301 AND 195.305 TO 195.336 AND SECTIONS 5 TO 11, CHAPTER 424, OREGON LAWS 2007, SECTIONS 2 TO 9 AND 17, CHAPTER 855, OREGON LAWS 2009, AND SECTIONS 2 TO 7, CHAPTER 8, OREGON LAWS 2010."

If the Property is subject to ORS 358.505, "THE PROPERTY DESCRIBED IN THIS INSTRUMENT IS SUBJECT TO SPECIAL ASSESSMENT UNDER ORS 358.505."

E. Miscellaneous. Time is of the essence of this Agreement. The facsimile transmission of any signed document including this Agreement shall be the same as delivery of an original. At the request of either party, the party delivering a document by facsimile will confirm facsimile transmission by signing and delivering a duplicate original document. This Agreement may be executed in two or more counterparts, each of which shall constitute an original and all of which together shall constitute one and the same Agreement. This Agreement contains the entire agreement and understanding of the parties with respect thereto. This Agreement shall be binding upon and shall inure to the benefit of the parties and their respective successor and assigns. Each party represents, covenants and warrants that the person signing this Agreement on their behalf has full right and authority to bind the party for whom such person signs to the terms and provisions of this Agreement. Each party covenants, represents and warrants that it has taken all steps necessary to bind themselves to this Agreement.

F. Exhibits. The following Exhibits are attached to this Agreement and incorporated within this Agreement: Exhibit A – Quitclaim Deed.

G. Buyer's Representations and Warranties. Buyer's representations and warranties shall survive closing and shall not merge with the deed.

i. The Buyer has the legal power, right, and authority to enter into this Agreement and the instruments referred to herein and to consummate the transactions contemplated herein.

ii. All requisite action (corporate, trust, partnership, or otherwise) has been taken by the Buyer in connection with entering into this Agreement and the instruments referred to herein and the consummation of the transactions contemplated herein. No further consent of any partner, shareholder, creditor, investor, judicial or administrative body, governmental authority, or other party is required.

iii. The person(s) executing this Agreement and the instruments referred to herein on behalf of the Buyer has the legal power, right, and actual authority to bind the Buyer in accordance with their terms.

iv. Neither the execution and delivery of this Agreement and the documents referred to herein, nor the incurring of the obligations set forth herein, nor the consummation of the transactions contemplated, nor compliance with the terms of this Agreement and the documents referred to herein conflicts with or results in the material breach of any terms, conditions, or provisions of or constitute a default under any bond, note or other evidence of indebtedness, or any contract, indenture, mortgage, deed of trust, loan, partnership agreement, lease, or other agreements or instruments to which the Buyer is a party.

H. Governing Law. This Agreement is made and executed under, and in all respects shall be governed and construed by the laws of the State of Oregon.

I. Venue. Venue related to this Agreement shall be in the Circuit Court of the State of Oregon for Columbia County, located in St. Helens, Oregon.

J. No Third Party Rights. This Agreement is solely for the benefit of the parties to this Agreement. Rights and obligations established under this Agreement are not intended to benefit any person or entity not a signatory hereto.

K. Pro Rates. Real property taxes, rents, unused tenant deposits (whether or not refundable), interest on obligations assumed by Buyer and accrued and unpaid obligations relating to the property and for which Buyer will be responsible, shall be the responsibility of Buyer. Real property taxes assessed after closing on account of prior special assessment of the property (e.g. as farm or forest property) shall be paid by Buyer. Buyer shall not be responsible for paying Seller for heating oil (if any) in the tank at date of possession.

FOR BUYER:

STEVEN WALTER RICE

_____
[Signature]

Dated this ____ day of _____, 2015.

FOR COUNTY:

BOARD OF COUNTY COMMISSIONERS
FOR COLUMBIA COUNTY, OREGON

By: _____
Henry Heimuller, Chair

Dated this ____ day of _____, 2015

Approved as to form:

By: _____
Office of County Counsel

BEFORE THE BOARD OF COUNTY COMMISSIONERS
FOR COLUMBIA COUNTY, OREGON

In the Matter of Declaring a Fiscal Emergency and Modifying Recording Dates under ORS 205.242 for the Columbia County Clerk	)))	RESOLUTION NO. 24 - 2015

WHEREAS, ORS 205.242(1) sets forth the days of the week on which the Columbia County Clerk shall receive and certify instruments presented for recording, such days being every day except Saturdays, Sundays and other holidays; and

WHEREAS, ORS 205.242(2) authorizes the Board of County Commissioners to limit the days during which the Clerk shall receive and certify instruments presented for recording, upon adoption of a resolution in which the Board determines that a fiscal emergency exists; and

WHEREAS, during the 2015-2016 budget process, the Board of County Commissioners was forced to implement Courthouse closures due to dwindling resources and increased costs; and

WHEREAS, for Fiscal year 2015-2016, County offices in the Columbia County Courthouse will be closed to the public every Friday;

NOW, THEREFORE, IT IS HEREBY ORDERED as follows:

1. A fiscal emergency exists in Columbia County which necessitates modification of the days during which the County Clerk shall receive and certify instruments presented for recording.

2. In addition to the days set forth in ORS 205.242(1), the County Clerk shall not receive and certify instruments presented for recording on Fridays beginning July 1, 2015, through June 30, 2016.

Dated this _____ day of _____, 2015.

BOARD OF COUNTY COMMISSIONERS
FOR COLUMBIA COUNTY, OREGON

By: _____
Henry Heimuller, Chair

Approved as to form

By: _____
Anthony Hyde, Commissioner

By: _____
Office of County Counsel

By: _____
Earl Fisher, Commissioner

BEFORE THE BOARD OF COUNTY COMMISSIONERS

FOR COLUMBIA COUNTY, OREGON

In the Matter of the Adoption of the Columbia County Budget for Fiscal Year 2015-2016 and the Appropriation and Levying of Ad Valorem Taxes	)))))	RESOLUTION NO. 27-2015

THIS MATTER having come before the Board of County Commissioners of Columbia County, Oregon on the 24th day of June 2015; and

WHEREAS, the Columbia County Budget Committee approved the Columbia County Budget for fiscal year 2015-2016 on May 14, 2015; and

WHEREAS, the Board of County Commissioners has received the budget and made any necessary modifications and the same is now ready for adoption; and

WHEREAS, notice of budget hearing and financial summary were published in the Chronicle and Sentinel Mist on May 27, 2015; and

WHEREAS, the Board of County Commissioners held a hearing to take testimony on the proposed budget on June 10, 2015;

NOW, THEREFORE, IT IS HEREBY RESOLVED that the Columbia County Budget in the total amount of $51,148,782 be, and hereby is, adopted; and

IT IS FURTHER RESOLVED that the amounts for the fiscal year beginning July 1, 2015 for the purpose of operating Columbia County for the fiscal year 2015-2016 be, and hereby are, appropriated as shown in Exhibit "A" which is attached hereto and incorporated herein by this reference; and

IT IS FURTHER RESOLVED that the Board of County Commissioners hereby imposes the taxes provided for in the adopted budget at the permanent rate of $1.3956 per $1,000 of assessed value for operations; and in the amount of $1,157,378 for bonds; and at the rate of $0.5797 per $1,000 for jail operations local option levy; and that these taxes are hereby imposed and categorized for tax year 2015-2016 upon the assessed value of all taxable property within Columbia County as of 1:00 a.m. January 1, 2015. The following allocation and categorization subject to the limits of section 11b, Article XI of the Oregon Constitution constitute the above aggregate levy:

	Subject to the General Government Limitation	Excluded from the Limitation
General Fund	$1.3956 rate /$1,000	
Jail Bond Debt Service Fund		$1,157,378
Jail Operations Levy	$0.5797 rate per $1,000	

IT IS FURTHER RESOLVED that the Budget Officer certify to the County Clerk and County Assessor of Columbia County, Oregon the tax levy made by this resolution, and the notice of property tax, and shall file with the Clerk's Office a copy of the budget as finally adopted.

DATED at St. Helens, Oregon this 24th day of June, 2015.

BOARD OF COUNTY COMMISSIONERS
FOR COLUMBIA COUNTY, OREGON

By:_____
Henry Heimuller, Chair

By:_____
Anthony Hyde, Commissioner

By:_____
Earl Fisher, Commissioner

Approved as to form:

By:_____
Office of County Counsel

Columbia County Exhibit A: FY16 Budget Appropriation

Fund, Dept, Budget Category	Appropriations
General Fund	
Commissioners	516,114
Assessor's Dept	1,269,489
Tax Office	216,280
Clerk's Office	244,678
Elections	264,082
Sheriff's Office	1,905,617
Economic Development	222,308
County Surveyor	81,940
District Attorney's Office	1,387,160
Justice Court	317,417
Col County Firing Range	3,562
Juvenile Department	691,244
County Counsel	452,985
Veterans' Service Office	68,000
Public Health	108,426
Court Mediation	32,051
Emergency Services	258,489
Finance/Purchasing/PR	886,253
Land Dev Services	1,831,517
Info Tech Department	596,014
Human Resources	199,152
Debt	2,912,621
Transfers	3,139,111
Contingency	410,228
Unapp Ending	1,500,000
General Fund Total	**19,514,736**
Roads	
Program	4,684,640
Capital	280,000
Debt	0
Transfers	395,859
Contingency	1,410,455
Unapp Ending	0
Roads Total	**6,770,954**
Parks	
Program	419,590
Capital	0
Debt	0
Transfers	98,000
Contingency	744,180
Unapp Ending	0
Parks Total	**1,261,771**

Fund, Dept, Budget Category	Appropriations
Cmty Crctns	
Program	1,285,904
Capital	0
Debt	6,680
Transfers	498,110
Contingency	220,038
Unapp Ending	0
Cmty Crctns Total	**2,010,731**
Fair	
Program	429,592
Capital	23,300
Debt	0
Transfers	46,546
Contingency	137,895
Unapp Ending	0
Fair Total	**637,332**
CCCCF	
Program	304,095
Capital	0
Debt	0
Transfers	36
Contingency	6,554
Unapp Ending	0
CCCCF Total	**310,685**
Solid Waste	
Program	1,877,560
Capital	0
Debt	323,660
Transfers	50,432
Contingency	2,049,974
Unapp Ending	0
Solid Waste Total	**4,301,627**
Direct Pass Thru	
Program	48,000
Capital	0
Debt	0
Transfers	0
Contingency	0
Unapp Ending	0
Direct Pass Thru Total	**48,000**

Fund, Dept, Budget Category	Appropriations
Corner Presv	
Program	69,469
Capital	0
Debt	0
Transfers	18,917
Contingency	123,918
Unapp Ending	0
Corner Presv Total	**212,304**
Inmate Benefit	
Program	35,900
Capital	0
Debt	0
Transfers	15,000
Contingency	61,975
Unapp Ending	0
Inmate Benefit Total	**112,875**
Courthouse Sec	
Program	3,500
Capital	10,000
Debt	0
Transfers	34,500
Contingency	115,075
Unapp Ending	0
Courthouse Sec Total	**163,075**
Law Lib	
Program	58,761
Capital	10,000
Debt	0
Transfers	0
Contingency	134,957
Unapp Ending	0
Law Lib Total	**203,718**
Unmet Needs	
Program	700,000
Capital	0
Debt	0
Transfers	0
Contingency	0
Unapp Ending	0
Unmet Needs Total	**700,000**

Fund, Dept, Budget Category	Appropriations
Transit	
Program	2,197,574
Capital	762,645
Debt	0
Transfers	61,184
Contingency	265,950
Unapp Ending	0
Transit Total	**3,287,353**
Building Srvcs	
Program	464,717
Capital	0
Debt	0
Transfers	95,449
Contingency	225,903
Unapp Ending	0
Building Srvcs Total	**786,069**
SIP	
Program	829,969
Capital	0
Debt	0
Transfers	578,131
Contingency	0
Unapp Ending	0
SIP Total	**1,408,100**
Jail Operations Fund	
Program	4,631,139
Capital	805,500
Debt	0
Transfers	508,545
Contingency	754,785
Unapp Ending	0
Jail Operations Total	**6,699,968**
PERS Reserve Fund	
Program	0
Capital	0
Debt	0
Transfers	0
Contingency	1,145,455
Unapp Ending	0
PERS Reserve Total	**1,145,455**

Fund, Dept, Budget Category	Appropriations
Trails	
Program	0
Capital	400,000
Debt	0
Transfers	2,998
Contingency	34,442
Unapp Ending	0
Trails Total	**437,440**
Jail Bond	
Program	0
Capital	0
Debt	1,126,589
Transfers	0
Contingency	0
Unapp Ending	10,000
Jail Bond Total	**1,136,589**
Total Columbia County	
Program	29,593,187
Capital	2,291,445
Debt	4,369,550
Transfers	5,542,817
Contingency	7,841,784
Unapp Ending	1,510,000
Total Columbia County	**51,148,782**

COLUMBIA COUNTY COURTHOUSE
RE-ROOFING CONTRACT

This Agreement is made and entered into by and between Columbia County, a political subdivision of the State of Oregon, hereinafter referred to as "Owner," and Wojahn Roofing, hereinafter referred to as "Contractor."

WITNESSETH:

IT IS HEREBY AGREED by and between the parties above-mentioned for and in consideration of the mutual promises hereinafter stated as follows:

1. Effective Date. This Agreement will be effective when it has been executed by both Owner and Contractor. However, Contractor shall not commence work on the project until Contractor has received a notice to proceed from the County.

2. Completion Date. The completion date for this Agreement shall be no later than August 21, 2015.

3. Project Summary. This Agreement is for the re-roofing of the Columbia County Courthouse Annex Building, located at 230 Strand Street, St. Helens, Oregon, as more particularly described in Exhibit A, Invitation to Bid, and Exhibit B, Contractor's Proposal.

4. Exhibits. The following exhibits are attached hereto and are incorporated herein by this reference:

   Exhibit A- Invitation to Bid (ITB) and Addenda
   Exhibit B- Contractor's Proposal

   Any conflict between this Agreement and its Exhibits shall be resolved, as follows: this Agreement shall control over all Exhibits, and Exhibit A shall control over Exhibit B.

5. Contractor's Services. Contractor agrees to provide the services described in the ITB, and as proposed in Contractor's Bid.

6. Consideration. Owner shall pay Contractor $178,552.00, said amount to be the complete compensation to Contractor for the services performed under this Agreement. Unless otherwise agreed to in writing by the parties, payments shall be made upon completion of the project. This Agreement is subject to the appropriation of funds by Owner, and/or the receipt of funds from state sources. In the event sufficient funds shall not be appropriated, and/or received by Owner for the payment of consideration required to be paid under this Agreement, Owner may terminate this Agreement without penalty in accordance with Section 20 of this Agreement.

7. Contract Representatives. Contract representatives for this Agreement shall be:

For the Owner:	For the Contractor:
Casey Garrett, Building Services Manager Land Development Services	Kurt Wojahn, Owner Wojahn Roofing

Columbia County
230 Strand Street
St. Helens, OR 97051

PO Box 672
Scappoose, OR 97056

All correspondence shall be sent to the above addressees when written notification is necessary. The Contractor understands and agrees that only the Owner's Contract Representative is authorized to give Contractor work authorizations, issue written approvals and notices to proceed. If any work is done by Contractor without prior written authorization by the Owner's Contract Representative, the Owner will not be obligated to pay for such work. Contract representatives can be changed by providing written notice to the other party at the address listed.

8. Permits; Licenses; Bonds; Qualifications. Unless otherwise specified, Contractor shall procure all permits, licenses and bonds, pay all charges and fees and give all notices necessary for performance of this Agreement prior to commencement of work. Contractor, by entering into this Agreement represents, that all personnel assigned to the work required under this Agreement are fully qualified to perform the work to which they will be assigned in a skilled and workmanlike manner and, if required to be registered, licensed or bonded by the state of Oregon, are so registered, licensed or bonded.

9. Compliance with Codes and Standards. Contractor shall at all times observe and comply with all federal and state laws, administrative rules and regulations issued there under, and with all applicable ordinances, and building, health and sanitation laws and codes. Contractor shall engage in no activity which creates an actual conflict of interest or violates the Code of Ethics as provided by ORS Chapter 244.

10. Reports. Contractor shall provide Owner's Contract Representative with periodic reports about the progress of the project as requested by Owner.

11. Ownership of Documents. Owner will own the documents and data prepared and/or compiled by Contractor pursuant to this agreement, including working papers, drawings, and other material necessary for complete understanding of the plans. Contractor hereby conveys, transfers, and grants to Owner all copyrights and rights of reproduction to all such documents. Owner agrees not to assign or transfer the drawings which would duplicate the work product represented in the drawings at another location without the written consent of the Contractor. Contractor shall retain the right to reproduce the documents for purposes related to this project, for Contractor's archival records, and for marketing purposes. Within 120 days of the completion of the project, the Contractor will provide to the Owner one reproducible set of as-built drawings based on mark-ups by the Contractor, which are reviewed for general conformance by the Contractor and appropriate consultants. In addition, Contractor will provide to the Owner digital copies of AutoCAD formatted construction documents and MS Word formatted specifications in CD-ROM format.

12. Guarantee. Contractor guarantees all work under this Agreement against all defects in materials and workmanship. This guarantee shall extend from the date of completion by the Owner for the period of a minimum of one year, or longer, if so specified in the Contract Documents. Contractor shall promptly make all necessary repairs or replacements to correct any defects in workmanship or materials for which notice in writing has been sent to the Contractor from the Owner's Contract Representative within the guarantee period. In the event Contractor fails to take any action to correct conditions covered by this guarantee promptly after notice of such condition, Owner may

do so, and Contractor and its surety shall be liable for the cost thereof. Normal wear and tear and the results of accidents not chargeable to Contractor or its agents are excluded from the above requirements.

13. Independent Contractor. Contractor is engaged hereby as an independent contractor and shall not be considered an employee, agent, partner, joint venturer or representative of Owner for any purpose whatsoever. Owner does not have the right of direction or control over the manner in which Contractor delivers services under this Agreement and does not exercise any control over the activities of the Contractor, except the services must be performed in a manner that is consistent with the terms of this Agreement. Owner shall have no obligation with respect to Contractor's debts or any other liabilities of Contractor. Contractor shall be responsible for furnishing all equipment necessary for the performance of the services required herein. In addition:

    A. Contractor will be solely responsible for payment of any Federal or State taxes required as a result of this Agreement.

    B. This Agreement is not intended to entitle Contractor to any benefits generally granted to Owner's employees. Without limitation, but by way of illustration, the benefits which are not intended to be extended by this Agreement to the Contractor are vacation, holiday and sick leave, other leaves with pay, tenure, medical and dental coverage, life and disability insurance, overtime, social security, workers' compensation, unemployment compensation, or retirement benefits (except insofar as benefits are otherwise required by law if the Contractor is presently a member of the Public Employees Retirement System).

    C. The Contractor is an independent contractor for purposes of the Oregon workers' compensation law (ORS Chapter 656) and is solely liable for any workers' compensation coverage under this Agreement. If the Contractor has the assistance of other persons in the performance of the Agreement, the Contractor shall qualify and remain qualified for the term of this Agreement as a carrier-insured or self-insured employer under ORS 656.407. If the Contractor performs this Agreement without the assistance of any other person, unless otherwise agreed to by the parties, Contractor shall apply for and obtain workers' compensation insurance for itself as a sole proprietor under ORS 656.128.

14. Statutory Provisions. Pursuant to the requirements of ORS 279C.500 through 279C.530 and Article XI, Section 10 of the Oregon Constitution, the following terms and conditions are made a part of this Agreement:

    A. Contractor shall:

        (1) Make payment promptly, as due, to all persons supplying to Contractor labor or material for the prosecution of the work provided for in this Agreement.

        (2) Pay all contributions or amounts due the Industrial Accident Fund from the Contractor or any subcontractor incurred in the performance of this Agreement.

        (3) Not permit any lien or claim to be filed or prosecuted against County on account of any labor or material furnished.

(4) Pay to the Department of Revenue all sums withheld from employees under ORS 316.167.

(5) Demonstrate that an employee drug testing program is in place.

B. If Contractor fails, neglects or refuses to make prompt payment of any claim for labor or services furnished to Contractor or a subcontractor by any person in connection with this Agreement as the claim becomes due, the proper officer or officers representing County may pay such claim to the person furnishing the labor or services and charge the amount of the payment against funds due or to become due Contractor by reason of this Agreement.

If the Contractor or a first-tier subcontractor fails, neglects or refuses to make payment to a person furnishing labor or materials in connection with this Agreement within 30 days after receipt of payment from the Owner, the Contractor or first-tier subcontractor shall owe the person the amount due plus interest charges commencing at the end of the 10-day period that payment is due under ORS 279C.580(4) and ending upon final payment, unless payment is subject to a good faith dispute as defined in ORS 279C.580. The rate of interest charged to the Contractor or first-tier subcontractor on the amount due shall equal three times the discount rate on 90-day commercial paper in effect at the Federal Reserve Bank in the Federal Reserve district that includes Oregon on the date that is 30 days after the date when payment was received from the Owner or from Contractor, but the rate of interest may not exceed 30 percent. The amount of interest may not be waived.

If the Contractor or a subcontractor fails, neglects or refuses to make payment to a person furnishing labor or materials in connection with this Agreement, the person may file a complaint with the Construction Contractors Board, unless payment is subject to a good faith dispute as defined in ORS 279C.580.

C. No person may be employed for more than 10 hours in any one day, or 40 hours in any one week, except in cases of necessity, emergency, or where the public policy absolutely requires it, and in such cases, except in cases of contracts for personal services as defined in ORS 279C.100, the employee shall be paid at least time and a half pay:

(1) For all overtime in excess of eight hours in any one day or 40 hours in any one week when the work week is five consecutive days, Monday through Friday; or

(2) For all overtime in excess of 10 hours in any one day or 40 hours in any one week when the work week is four consecutive days, Monday through Friday; and

(3) For all work performed on Saturday and on any legal holiday specified in ORS 279C.540.

Contractor and any employer under this Agreement must give notice in writing to employees who work under this Agreement, either at the time of hire or before commencement of work on the contract, or by posting a notice in a location frequented by employees, of the number of hours per day and days per week, that the employees may be required to work.

D. Contractor shall promptly, as due, make payment to any person, co-partnership, association or corporation, furnishing medical, surgical and hospital care services or other needed care and attention, incident to sickness and injury, to the employees of Contractor, of all sums that Contractor agrees to pay for the services and all moneys and sums that Contractor collects or deducts from the wages of employees under any law, contract or agreement for the purpose of providing or paying for such services.

E. All subject employers working under this Agreement, including Contractor, shall comply with ORS 656.017 and provide the required Workers' Compensation coverage, unless such employers that are exempt under ORS 656.126. Contractor shall ensure that each of its subcontractors complies with these requirements.

F. Contractor shall include in each subcontract for property or services entered into by the Contractor and a first-tier subcontractor, including a material supplier, for the purpose of performing a construction contract:

(1) A payment clause that obligates the Contractor to pay the first-tier subcontractor for satisfactory performance under its subcontract within 10 days out of such amounts as are paid to the Contractor by Owner under this Agreement; and

(2) An interest penalty clause that obligates the Contractor, if payment is not made within 30 days after receipt of payment from Owner, to pay to the first-tier subcontractor an interest penalty on amounts due in the case of each payment not made in accordance with the payment clause included in the subcontract under paragraph (1) of this subsection. Contractor or any first-tier subcontractor may not be obligated to pay an interest penalty if the only reason that Contractor or the first-tier subcontractor did not make payment when payment was due is that Contractor or first-tier subcontractor did not receive payment from Owner or Contractor when payment was due. The interest penalty shall be:

(a) For the period beginning on the day after the required payment date and ending on the date on which payment of the amount due is made; and

(b) Computed at the rate specified in ORS 279C.515(2).

G. Contractor shall include in each of Contractor's subcontracts, for the purpose of performance of such contract condition, a provision requiring the first-tier subcontractor to include a payment clause and an interest penalty clause conforming to the standards of subsection F of this section in each of the first-tier subcontractor's subcontracts and to require each of the first-tier subcontractor's subcontractors to include such clauses in their subcontracts with each lower-tier subcontractor or supplier.

H. The clauses required by subsections F and G of this section are not intended to impair the right of Contractor or a subcontractor at any tier to negotiate, and to include in the subcontract, provisions as allowed by ORS 279C.580(5). Such

clauses and provisions are subject to the provisions of ORS 279C.580(6) through (10).

I. The specifications to this Agreement include the prevailing rate of wage that must be paid to workers in each trade or occupation required for the public works employed in the performance of this Agreement either by the Contractor or any subcontractor or other person doing or contracting to do the whole or any part of the work contemplated by this Agreement. All workers shall be paid not less than the specified minimum hourly rate of wage.

J. A fee is required to be paid to the Commissioner of the Bureau of Labor and Industries as provided in ORS 279C.825(1). The fee shall be paid to the Commissioner under the administrative rule of the Commissioner.

K. This Agreement is expressly subject to the debt limitation of Oregon counties set forth in Article XI, Section 10 of the Oregon Constitution, and is contingent upon funds being appropriated therefor. Any provisions herein which would conflict with law are deemed inoperative to that extent.

15. Non-Discrimination. Contractor agrees that no person shall, on the grounds of race, color, creed, national origin, sex, marital status, handicap or age, suffer discrimination in the performance of this Agreement when employed by Contractor. Contractor certifies that it has not discriminated and will not discriminate, in violation of ORS 279A.110, against any minority, women or emerging small business enterprise or against a business enterprise that is owned or controlled by or that employs a disabled veteran in obtaining any required subcontract.

16. Assignment; Subcontracts. Contractor shall not assign, subcontractor delegate the responsibility for providing services hereunder to any other person, firm or corporation without the express written permission of the Owner. Any attempted assignment or subcontract by Contractor without the written consent of Owner shall be void. Contractor shall be fully responsible for the acts or omissions of any assigns or subcontractors and of all persons employed by them, and the approval by Owner of any assignment or subcontract shall not create any contractual relation between the assignee or subcontractor and Owner.

17. Nonwaiver. The failure of the Owner to enforce any provision of this Agreement shall not constitute a waiver by the Owner of that or any other provision of the Agreement.

18. Indemnity. Contractor shall indemnify, defend, save, and hold harmless the Owner, its officers, agents and employees from any and all claims, suits, actions, losses, damages, liabilities, costs and expenses of any nature, resulting from, arising out of, or relating to the activities of the Contractor or Contractor's officers, employees, subcontractors, or agents under this Agreement.

Contractor shall cause all subcontractors to indemnify, defend, save, and hold harmless the Owner, its officers, agents and employees from any and all claims, suits, actions, losses, damages, liabilities, costs and expenses of any nature, resulting from, arising out of, relating to the activities of the subcontractor or subcontractor's officers, employees, subcontractors, or agents for the work described herein.

19. Insurance.

A. Contractor shall purchase and maintain, and shall require its subcontractors to purchase and maintain, for the entire period that work is performed under this Agreement the following policies of insurance to protect Owner and its officers, agents and employees:

(1) Commercial general liability insurance coverage from an insurance company authorized to do business in Oregon in an amount not less than $2,000,000 per occurrence for bodily injury and property damage.

(2) Automobile liability insurance covering each automobile utilized in the performance of this Agreement from an insurance company authorized to do business in Oregon in an amount not less than $2,000,000 per occurrence for bodily injury and property damage.

(3) Workers' Compensation and Employer's liability meeting statutory limits mandated by State and federal laws.

B. Prior to commencing work, Contractor and any subcontractors shall provide Owner a certificate or certificates of insurance in the amounts required which names Columbia County, its officers, agents and employees as additional insureds to the Commercial General and Automobile Liability policies as stated above. The certificates shall be accompanied by additional insured endorsements identifying Columbia County, its officers, agents and employees as additional insureds. Coverage will be primary and non-contributory with any other insurance and self-insurance. Contractor agrees to provide, and shall require its subcontractor to provide, Owner at least thirty (30) days prior written notice that any insurance coverage required by this paragraph will be canceled, not renewed, modified in any material way, or changed to make the coverages no longer meet the minimum requirements of this Contract. In the event of any discrepancy in the various provisions of this Agreement as to the amount and types of insurance required, the highest policy limits specified and all of the coverage types specified shall be required.

C. All of Contractor's and subcontractor's liability insurance policies, with the exception of worker's compensation, shall contain a waiver of subrogation against the County.

20. Termination. This Agreement may be terminated at any time in whole or in part by mutual consent of both parties. The County may terminate this Agreement upon (30) days advance written notice delivered by registered or certified mail, or in person, to the Contractor. The Owner may terminate this Agreement, effective upon delivery of written notice to Contractor, or at such later date as may be established by the Owner under the following conditions:

A. If Contractor fails to perform the work in a manner satisfactory to Owner.

B. If any license or certificate required by law or regulation to be held by Contractor to provide the services required by this Agreement is for any reason denied, revoked, or not renewed.

C. If funding becomes inadequate to allow the work to continue in accordance with the project schedule.

In case of termination, Contractor shall be required to repay to Owner the amount of any funds advanced to Contractor which Contractor has not earned or expended through the provision of services in accordance with this Contract. However, Contractor shall be entitled to retain all costs incurred and fees earned by Contractor prior to that termination date, and any amounts remaining due shall be paid by Owner not to exceed the maximum amount stated above and decreased by any additional costs incurred by Owner to correct the work performed. The rights and remedies of the Owner related to any breach of this Agreement by Contractor shall not be exclusive, and are in addition to any other rights and remedies provided by law or under this Contract. Any termination of this Agreement shall be without prejudice to any obligations or liabilities of either party already accrued before such termination.

21. Time of the Essence. The parties agree that time is of the essence in this Agreement. Contractor shall commence work under this Agreement upon receipt of a Notice to Proceed from the Owner's Contract Representative and shall prosecute the work diligently, so as to proceed with and complete the work in this Project in a timely manner. Any failure of the Contractor to perform work on time is a material breach of this Agreement.

22. Mediation. In the event of a dispute between the parties arising out of or relating to this Agreement, the parties agree to submit such dispute to a mediator agreed upon by both parties as soon as practicable after the dispute arises, and preferably before commencement of litigation or any permitted arbitration. The parties agree to exercise their best efforts in good faith to resolve all disputes in mediation.

23. Choice of Law. This Agreement shall be governed by the laws of the State of Oregon.

24. Venue. Venue relating to this Agreement shall be in the Circuit Court of the State of Oregon for Columbia County, located in St. Helens, Oregon.

25. Attorneys Fees. In the event an action, suit or proceeding, including appeal therefrom, is brought for failure to observe any of the terms of this Agreement, each party shall be responsible for its own attorneys fees, expenses, costs and disbursements for said action, suit, proceeding or appeal.

26. Severability. Should any provision or portion thereof of this Agreement at any time be in conflict with any law, ruling or regulation, or be unenforceable for any reason, then such provision shall continue in effect only to the extent that it remains valid. In the event any provision of this Agreement becomes less than fully operative or is for any reason held invalid or unconstitutional by any court of competent jurisdiction, such portion shall be deemed a separate, distinct and independent provision and the remaining portion of that provision and all other provisions of this Agreement shall, nevertheless, remain in full force and effect.

27. Third Party Beneficiaries. The Oregon Judicial Department is a third party beneficiary to this Agreement. There are no other third party beneficiaries.

28. ENTIRE AGREEMENT. THIS AGREEMENT (INCLUDING EXHIBITS) CONSTITUTES THE ENTIRE AGREEMENT BETWEEN THE PARTIES. NO WAIVER, CONSENT, MODIFICATION OR CHANGE OF TERMS OF THIS AGREEMENT SHALL BIND EITHER PARTY UNLESS IN WRITING AND SIGNED BY BOTH PARTIES. SUCH WAIVER, CONSENT, MODIFICATION OR CHANGE, IF MADE, SHALL BE EFFECTIVE ONLY IN THE SPECIFIC INSTANCE AND FOR THE SPECIFIC

PURPOSE GIVEN. THERE ARE NO UNDERSTANDINGS, AGREEMENTS, OR REPRESENTATIONS, ORAL OR WRITTEN, NOT SPECIFIED HEREIN REGARDING THIS AGREEMENT. CONTRACTOR, BY THE SIGNATURE OF ITS AUTHORIZED REPRESENTATIVE(S) BELOW, HEREBY ACKNOWLEDGES THAT IT HAS READ THIS AGREEMENT, UNDERSTANDS IT AND AGREES TO BE BOUND BY ITS TERMS AND CONDITIONS.

IN WITNESS WHEREOF, the parties hereto have executed, or have caused to be executed by their duly authorized officials, this Agreement between Owner and Contractor in duplicate on the respective dates indicated below.

CONTRACTOR:

By:_____

Title:_____

Date:_____

OWNER:

BOARD OF COUNTY COMMISSIONERS
FOR COLUMBIA COUNTY, OREGON

By:_____
Henry Heimuller, Chair

By:_____
Anthony Hyde, Commissioner

By:_____
Earl Fisher, Commissioner

Date:_____

Approved as to form by

By:_____
Office of County Counsel

INVITATION TO BID

FOR THE RE-ROOFING OF THE COLUMBIA COUNTY COURTHOUSE ANNEX BUILDING

PROCUREMENT DOCUMENTS

TABLE OF CONTENTS

1. PROJECT DESCRIPTION/SITE LOCATION 2

2. PROCUREMENT DOCUMENTS/CONTENTS. 3

3. PROPOSED PROJECT TIME-LINE 3

4. INSTRUCTIONS TO BIDDERS 3

4.1. MANDATORY PRE-BID CONFERENCE 3
4.2. PROJECT START DATE 4
4.3. SUBSTANTIAL COMPLETION 4
4.4. FINAL COMPLETION 4
4.5 LIQUIDATED DAMAGES 4
4.6. WORK TO BE DONE 4
4.7. PROJECT MANAGER 6
4.8. TIME AND PLACE OF RECEIVING AND OPENING BIDS ("BID CLOSING"). 6
4.9 TIME AND PLACE OF RECEIVING FIRST TIER SUBCONTRACTOR DISCLOSURE. 6
4.10 FORM OF BID. 6
4.11 PREQUALIFICATION APPLICATIONS. 6
4.12 PUBLIC WORKS CONTRACT 6
4.13 ASBESTOS. 7
4.14 CONSTRUCTION CONTRACTORS BOARD 7
4.15 NON-DISCRIMINATION CERTIFICATION 7
4.16 RESIDENT BIDDER 7
4.17 ENVIRONMENTAL AND NATURAL RESOURCES LAWS; REMEDIES 7
4.18 BID SECURITY. 7
4.19 PRE-CLOSING MODIFICATION OR WITHDRAWAL OF OFFERS 7
4.20 LATE BIDS, LATE WITHDRAWALS AND LATE MODIFICATIONS 8
4.21 CONTRACT AWARD. 8
4.22 OFFER EVALUATION AND AWARD; DETERMINATION OF RESPONSIBILITY 8
4.23 PERFORMANCE/PAYMENT SECURITY 11
4.24 RIGHT TO WAIVE INFORMALITIES AND/OR REJECT BID PROPOSALS 11
4.25 ADDENDA. 11
4.26 PROTEST PROCEDURES 12
4.27 PREPARATION COSTS 12
4.28 FIRST-TIER SUBCONTRACTOR DISCLOSURE. 12
4.29 REQUEST FOR CLARIFICATION OR CHANGE; SOLICITATION PROTESTS 12

5. BID FORM 14

6. FIRST-TIER SUBCONTRACTOR DISCLOSURE FORM 18

7. OREGON BID BOND 19

8. OREGON PERFORMANCE BOND 20

9. OREGON PAYMENT BOND 21

10. SPECIAL PROVISIONS. 22

SECTION 1. STANDARD OF WORKMANSHIP 22
SECTION 2. MATERIALS. 22
SECTION 3. EXAMINATION OF LOCATION AND CONDITIONS. 22
SECTION 4. ORDER AND PROGRESS OF WORK 22
SECTION 5. SCOPE OF WORK 22
SECTION 6. COMMENCEMENT OF WORK. 22
SECTION 7. INSURANCE 23
SECTION 8. INSPECTION 24
SECTION 9. ALTERATIONS IN DETAIL 24
SECTION 10. DISCHARGE OF EMPLOYEES. 24
SECTION 11. PUBLIC CONVENIENCE. 24
SECTION 12. PROTECTION OF PROPERTY AND PERSONS 24
SECTION 13. CLEANING UP. 25
SECTION 14. EXTENSION OF TIME. 25
SECTION 15. ADJUSTMENT OF CONTRACT. 25
SECTION 16. CAUSES BEYOND CONTROL. 25
SECTION 17. DEFAULT. 26
SECTION 18. SUBCONTRACTING. 26
SECTION 19. LIABILITY OF PUBLIC OFFICIALS. 26
SECTION 20. LAWS, REGULATIONS AND ORDERS. 27
SECTION 21. SUSPENSION OF ACTIVITIES. 27
SECTION 22. ADVANCE PAYMENTS TO CONTRACTOR. 27
SECTION 23. NON-DISCRIMINATION. 27
SECTION 24. LIQUIDATED DAMAGES. 27
SECTION 25. TIME OF ESSENCE 28

Attachment A: Oregon And Federal Prevailing Wage Rates

Attachment B: Specifications and Drawings

Attachment C: Sample Contract

INVITATION TO BID
FOR THE RE-ROOFING OF THE COLUMBIA COUNTY COURTHOUSE ANNEX BUILDING

PROCUREMENT DOCUMENTS

Columbia County, by and through its Board of County Commissioners, hereby invites bids from roofing contractors for the re-roofing of the Columbia County Courthouse Annex Building in St. Helens, Oregon.

1. PROJECT DESCRIPTION/SITE LOCATION.

The purpose of the Invitation to Bid (ITB) is to establish a Contract for re-roofing of the Columbia County Courthouse Annex building in St. Helens, Oregon. The building is located at 230 Strand Street, St Helens, Oregon. The work contemplated under the Contract includes all labor, materials, transportation, equipment and services for, and incidental to, the completion of all work in connection with the project described in

these Procurement Documents.

The Courthouse Annex building will be occupied and Columbia County will be conducting normal operations Monday through Friday, 8am to 5pm during construction.

Additional Information regarding the Project is provided in Section 4.6 Work To Be Done, and other Procurement Documents. Bidders shall carefully review all Procurement Documents, including but not limited to the Sample Contract, before submitting a bid.

Contractors that developed or drafted specifications, and/or requirement, statements of work for the procurement are excluded from bidding to compete for the award of the procurement.

The following range is an estimate of the cost of the Project for bonding purposes: $100,000 - $200,000.

2. PROCUREMENT DOCUMENTS/CONTENTS.

The "Procurement Documents" include all of the following, including the Attachments, which are attached hereto and incorporated herein by this reference:

1. Project Description/Site Location
2. Procurement Documents/Contents
3. Proposed Project Time-Line
4. Instructions to Bidders
5. Bid form
6. First-tier Subcontractor Disclosure Form
7. Oregon Bid Bond
8. Oregon Performance Bond
9. Oregon Payment Bond
10. General Provisions
11. Special Provisions
12. Grant Requirements

Attachment A: Oregon & Federal Prevailing Wage Rates
Attachment B: Specifications and Drawings
Attachment C: Sample Contract

3. PROPOSED PROJECT TIME-LINE.

Invitation to Bid – Publish	April 24, 2015
Mandatory Pre-Bid Meeting (1:30 pm)	May 8, 2015*
Request for Clarification or Change/Protests (5:00 pm)	May 15, 2015
Bid Closing (2:00 pm)	May 29, 2015*
Notice of Intent To Award	June 5, 2015
Deadline for Bidder's Protest	June 12, 2015
Notice to Proceed	June 22, 2015
Project Start Date	June 29, 2015
Substantial Completion	July 13, 2015
Final Completion	July 20, 2015

*With the exception of the dates marked with an asterisk (*), the dates provided are estimated and may change in the County's sole discretion. Bidders are responsible for determining all applicable deadlines.

4. INSTRUCTIONS TO BIDDERS.

4.1. MANDATORY PRE-BID CONFERENCE.

A mandatory pre-bid conference will be held on **May 8, 2015 at 1:30pm,** in the Land Development Services Meeting Room on the first floor of the Columbia County Courthouse Annex~ 230 Strand Street, St. Helens, Oregon 97051(next to the historical courthouse). Any statements made at this conference will not change the Procurement Documents unless an Addendum has been issued by Columbia County and posted on the County's website at http://www.co.columbia.or.us/departments/land-development-services/lds-home.

BIDDERS OR THEIR REPRESENTATIVE ARE REQUIRED TO ATTEND THIS MANDATORY PRE-BID CONFERENCE. BIDS WILL ONLY BE EVALUATED FROM BIDDERS OR THEIR REPRESENTATIVE WHO REGISTERED AND ATTENDED THE MANDATORY PRE-BID CONFERENCE, AND ALL OTHER BIDS WILL BE CONSIDERED NON-RESPONSIVE.

4.2. PROJECT START DATE.

The project start date will be **seven (7)** calendar days from issuance of Notice to Proceed or as instructed in the Notice to Proceed.

4.3. SUBSTANTIAL COMPLETION.

The Project must be substantially complete no later than July 13, 2015.

4.4. FINAL COMPLETION.

The Project must be finally complete no later than July 20, 2015.

4.5. WORK TO BE DONE.

Columbia County intends to contract for the re-roofing of the Columbia County Courthouse Annex building per the attached specifications and drawings. The following summarizes the work included and shall be used for information only. All work shall be done according to the procurement documents. Work of this Project is described as the re-roofing of the Columbia County Courthouse Annex building. The work includes but is not limited to:

4.5.1 The installation of a PVC membrane system over the existing built-up-roof, and parapet walls, and any other components required to furnish the owner a twenty year warranted roof system.

4.5.2 Supply and installation of underlayment board, PVC membrane and all other components required in the roof system specifications.

4.5.3 Site work, preparation and installation of all roofing systems and components, staging and storage of materials, safety and monitoring, demolition of abandoned rooftop equipment and antenna base structures, removal of disassembled antenna systems.

4.5.4 Except as otherwise specified, the Contractor shall furnish all labor, tools, implements, machinery, supplies, materials and incidentals, and shall do all things necessary to perform and complete the work to be done under the contract according to the Procurement Documents. This shall be understood to include, in addition to the work specifically called for in the Specifications, the performance of such additional and extra work as may appear to the County to be necessary for the completion of the work contemplated in a substantial and workmanlike manner.

4.5.5 In order to establish a basis of quality, certain processes, types of machinery and equipment, or kinds of materials may be specified, either by description of process or by designating a manufacturer by name and referring to its brand or product designation, or by specifying a kind of material. It is not the intent of these

Procurement Documents to exclude other processes, equipment, or materials of equal or better value, utility or merit.

Whenever a process is designated or a manufacturer's name, brand, or product is described, it shall be understood that the words, "or approved equal" follow such name, designation, or description, whether in fact they do so or not.

If a Bidder proposes to furnish an item, process or material, which it claims to be equal to or better than the one designated, then:

1. Bidder shall deliver to the Project Manager at least five (5) days prior to the Bid closing date and time, a written description together with supporting data and details sufficient to permit the County to make a determination of equivalency;
2. The County may require demonstration, additional tests, and additional data, all to be supplied at the expense of the Bidder; and
3. The County shall in its sole discretion determine if an item submitted as an alternate is an "approved equal."

4.7. PROJECT MANAGER.

Project Manager:
Casey Garrett, Facilities Services Manager
Department of Land Development Services
Email: casey.garrett@co.columbia.or.us
Phone: 503-397-7213
Fax: 503-366-3902

4.8. TIME AND PLACE OF RECEIVING AND OPENING BIDS ("Bid Closing").

Bids for the work described above will be received by Columbia County's Department of Land Development Services, 230 Strand St. Helens, Oregon 97051 until May 29, 2015 at 2:00 p.m. Pacific Time, ("Bid Closing") according to the clock in the reception area of the Department of Land Development Services. Bids received after this date and time will be returned unopened. Bids will be publicly opened and read immediately following bid closing in the Department of Land Development Services. Casey Garrett, Facilities Services Manager, is the person designated for the receipt of Bids.

4.9 TIME AND PLACE OF RECEIVING FIRST TIER SUBCONTRACTOR DISCLOSURE.

Bidders shall submit a list of first-tier subcontractors, if any, no later than 4:00 p.m. on May 29, 2015 on the form provided. The County may not award a contract to a bidder who does not comply with this requirement.

4.10 FORM OF BID.

All bids must be written in the space provided, either typed or in ink, on the Bid Form provided herein, or re-typed with exact information. No facsimile or other electronically submitted bids will be accepted. A bid is subject to and incorporates by reference all of the Procurement Documents for the Project. A bid must be signed by an authorized representative or representatives of the bidder. A bid must be presented in a sealed envelope to the Department of Land Development Services for Columbia **County, 230 Strand, St. Helens, Oregon, 97051, at or before Bid Closing and shall be marked with the words "BID FOR COLUMBIA COUNTY COURTHOUSE ROOFING" or equivalent.** A bidder must fill in all required information on the Bid Form included in the Procurement Documents.

4.11 PREQUALIFICATION APPLICATIONS.

Prequalification applications subject to ORS 279C.430 are not required.

4.12 PUBLIC WORKS CONTRACT.

This project is a public works project and is subject to ORS 279C.800 through ORS 279C.870. No Bid will be considered unless the Bid contains a statement by the Bidder that the Bidder will comply with ORS 279C.838, ORS 279C.840. The existing State and Federal prevailing rates of wage that must be paid to workers in each trade or occupation by the successful Bidder and each Subcontractor or other person doing or contracting to do the whole or any part of the work contemplated by the Contract are included in the Procurement Documents, attached as Attachment A and incorporated herein by this reference. Attachment A also shows which prevailing rate of wage is higher for workers in each trade or occupation in each locality, as determined by the Commissioner of the Bureau of Labor and Industries under ORS 279C.815(2)(b). A fee is required to be paid to the Commissioner of the Bureau of Labor and Industries as provided in ORS 279C.825(1). The successful Bidder and any subcontractor must have a public works bond filed with the Construction Contractors Board before starting work on the Project, unless exempt under ORS 279C.836(4), (7) or (8).

4.13 ASBESTOS.
Bidders are not required to be licensed under ORS 468A.720, to be eligible for the contract.

4.14 CONSTRUCTION CONTRACTORS BOARD
No Bid shall be considered unless the Bidder is licensed by the Construction Contractors Board as required by ORS 701.035

4.15 NON-DISCRIMINATION CERTIFICATION.

Each Bidder shall certify by Bid Form signature that the Bidder has not discriminated and will not discriminate, in violation of ORS 279A.110, against any minority, women or emerging small business enterprise, certified under ORS 200.005, or any business enterprise that is owned or controlled by or employs a disabled veteran as defined in ORS 408.225, in obtaining any required subcontracts. Failure to do so may be grounds for disqualification.

4.16 RESIDENT BIDDER.

Each bid must identify whether the bidder is a resident bidder as defined in ORS 279A.120.

4.17 ENVIRONMENTAL AND NATURAL RESOURCES LAWS; REMEDIES.

Provisions concerning environmental and natural resources laws and remedies are included in Section L of the General Provisions.

4.18 BID SECURITY.

Each Bid shall be accompanied by a surety bond, irrevocable letter of credit issued by an insured institution as defined in ORS 706.008, cashier's check or certified check in the amount of 10% of the total amount stated in the Bid as bid security. The full amount of the bid security shall be forfeited in the event the successful Bidder fails to execute a satisfactory Contract and submit required bonds within ten (10) days following the date of receipt of the Contract prepared by the County and made ready for execution. The bid security shall be taken and considered as liquidated damages and not as a penalty for failure of the Bidder to execute the Contract and submit bonds. The Bid security of all unsuccessful Bidders shall be returned after a Contract is executed, when all Bids have been rejected, or when a Bid has been properly withdrawn as provided in 4.19, below. The County will return the Bid security of the successful Bidder after the Bidder executes the Contract and delivers a good and sufficient performance bond, a good and sufficient payment bond and proof of insurance.

4.19 PRE-CLOSING MODIFICATION OR WITHDRAWAL OF OFFERS.

4.19.1. Modifications. A Bidder may modify its bid by written notice submitted on the Bidder's letterhead, signed by an authorized representative of the Bidder, delivered to Casey Garrett, Columbia County Facilities Services Manager, and received by the County prior to Closing. A Bidder shall prepare and submit any modification to its bid to the County in accordance with OAR 137-049-0280. Any modification must include the Bidder's statement that the modification amends and supersedes the prior bid. The Bidder shall mark the submitted modification as follows:

a. Bid modification; and

b. Columbia County Courthouse Roofing Project

4.19.2. Withdrawals.

a. A Bidder may withdraw its bid by written notice submitted on the Bidder's letterhead, signed by an authorized representative of the Bidder, delivered to Casey Garrett, Columbia County Facilities Services Manager, and received by the County prior to Closing. The Bidder or authorized representative of the Bidder may also withdraw its bid in person prior to Closing, upon presentation of appropriate identification and satisfactory evidence of authority.

b. The County may release an unopened bid withdrawn under 2(a), to the Bidder or its authorized representative, after voiding any date and time stamp mark.

c. A Bidder shall mark the written request to withdraw a bid as follows:

i. Bid withdrawal; and

ii Columbia County Courthouse Roofing Project.

4.20 LATE BIDS, LATE WITHDRAWALS AND LATE MODIFICATIONS.

Any bid received after the Bid Closing date and time is late. A Bidder's request for withdrawal or modification of a bid received after Bid Closing is late. The County will not consider late bids, withdrawals, or modifications except as permitted by OAR 137-049-0350.

4.21 CONTRACT AWARD.

After bids are opened and a determination is made that a public improvement contract is to be awarded, the County shall award the contract to the lowest responsible Bidder. The Contract will be awarded as a whole to one Bidder. The Contract will be prepared by the Office of Columbia County Counsel and will consist of duplicate originals, including a copy of the accepted bid. The Contract will be delivered or made available to the successful Bidder for execution. Two duplicate originals of the Contract shall be signed by the Contractor and returned to the County within ten (10) calendar days of mailing by the County or upon receipt by bidder, whichever is sooner, along with the required Certificates of Insurance, Additional Insured Endorsement(s), W-9, and performance and payment bond for final approval, dating and execution by the County. The Contract will not be effective until finally approved, dated and executed by the County. After execution by the County, a signed original of the Contract will be delivered or made available to the Contractor and the Bid security will be returned. A Sample Contract is included in the Procurement Documents. The Sample Contract will be modified at the discretion of the County to reflect the procurement documents, to comply with Grant requirements, if any, or to comply with Oregon and Federal laws. Terms and conditions set forth in the Sample Contract are subject to pre-bid protest restrictions. Submission of a bid indicates the Bidder's agreement to enter into the County's form of contract.

4.22 OFFER EVALUATION AND AWARD; DETERMINATION OF RESPONSIBILITY.

4.22.1. The County will be evaluating bids on a low bid lump sum basis. The County may reject any bid not in compliance with all public contracting procedures and requirements, including the requirement to demonstrate the Bidder's responsibility under ORS 279C.375(3)(b), and may reject for good cause all bids after finding that doing so is in the public interest.

4.22.2. If awarded, the County will award the Contract to the Responsible Bidder submitting the lowest Responsive Bid, provided that such Bidder is not listed by the Construction Contractors Board as being disqualified to hold a Public Improvement Contract, See ORS 279C.375(3)(a).

4.22.3. Bidders are required to demonstrate their ability to perform satisfactorily under a contract. Before

awarding a contract, the County must have information that indicates that the Bidder meets the standards of responsibility. To be a Responsible Bidder, the County must determine that the Bidder:

a. Has available the appropriate financial, material, equipment, facility and personnel resources and expertise, or ability to obtain the resources and expertise, necessary to meet all contractual responsibilities;

b. Holds current licenses that businesses or service professionals operating in Oregon must hold in order to perform the work specified in the contract;

c. Is covered by liability insurance and other insurance in the amounts the County requires in the Contract Documents;

d. Qualifies as a carrier-insured employer or a self-insured employer under ORS 656.407 or has elected coverage under ORS 656.128;

e. Has made the first-tier subcontractor disclosure, required by 4.28, below;

f. Has a satisfactory record of contract performance. The County may review the Bidders' performance on both private and public contracts in determining the Bidders' record of contract performance;

g. Has a satisfactory record of integrity. A Bidder may lack integrity if the County determines the Bidder demonstrates a lack of business ethics such as a violation of state environmental laws or false certifications made to a Contracting Agency. The County may find a Bidder not responsible based on the lack of integrity of any person having influence or control over the Bidder (such as a key employee of the Bidder that has the authority to significantly influence the Bidder's performance of the Contract or a parent company, predecessor or successor person);

h. Is qualified legally to contract with the County; and

i. Has supplied all necessary information in connection with the inquiry concerning responsibility. If the Bidder fails to promptly supply information requested by the County concerning responsibility, the County will base the determination of responsibility upon any available information, or may find the Bidder not responsible.

4.22.4. The County may require a Bidder to submit Product Samples, Descriptive Literature, technical data, or other material and may also require any of the following prior to Award:

a. Demonstration, inspection or testing of a product for characteristics such as compatibility, or quality of workmanship;

b. Examination of such elements as appearance or finish; or

c. Other examinations to determine whether the product conforms to Specifications.

4.22.5. The County will seek information from a Bidder only to clarify the Bidder's Bid. Such clarification may not vary, contradict or supplement the Bid. A Bidder must submit written and signed clarifications and such clarifications will become part of the Bidder's Bid.

4.22.6. <u>References</u>.

a. The County will perform reference checks on the apparent low bidder. Bidder shall provide a list of three (3) different project references that Bidder has worked on within the last three (3) years

of comparable size and scope. Only Contractors that have demonstrated experience on projects similar both in size and complexity within the last three (3) years will be considered for this project. Bidder shall include the following information for each reference:

- Name of Project
- Project Location
- Project Date
- Firm Name for Contact Person #1
- Name of Contact Person #1
- Telephone Number for Contact Person #1
- Fax number for Contact Person #1
- Firm Name for Contact Person #2
- Name of Contact Person #2
- Telephone Number for Contact Person #2
- Fax number for Contact Person #2

The references will be checked to determine if they are supportive of the Bidder's ability to meet the requirements of this ITB.

Bidder must provide references that can be contacted regarding the quality of workmanship and service provided to current and past customers.

The County reserves the right to choose and investigate any reference whether or not furnished by the Bidder, and to investigate past performance of any Bidder with respect to its successful performance of similar projects, compliance with specifications and contractual obligations, its completion or delivery of service on schedule, and its lawful payment of suppliers, subcontractors, and employees.

The County may postpone the award or execution of the Contract after the announcement of the apparent successful Bidder in order to complete its investigation. The County may reject a bid if, in the opinion of the County, overall reference responses indicate inadequate performance.

The County will make three attempts to contact the references from the list provided by the Bidder.

Each reference contacted will be asked the same questions, including but not limited to the above factors, including: (1) quality of service; (2) delivery; (3) responsiveness to reported problems, including orders and billing; (4) how well Bidder met the terms of the contract; and (5) whether the reference would choose to hire the Bidder again.

b. Bidder's supervisor who will be overseeing the work shall have experience on projects similar in both size and complexity and submit with the bid, references for three projects that were performed within the last three (3) years. References provided for the Bidder's supervisor may be the same three (3) references that are provided for the Bidder. Bidder must provide references with the bid that can be contacted regarding the quality of workmanship and service that the Bidder's supervisor provided on current and past projects of similar size and complexity

The list of supervisor's references will include the following information:

- Name of Project
- Project Location
- Project Date
- Firm Name for Contact Person #1
- Name of Contact Person #1

- Telephone Number for Contact Person #1
- Fax number for Contact Person #1
- Firm Name for Contact Person #2
- Name of Contact Person #2
- Telephone Number for Contact Person #2
- Fax number for Contact Person #2

4.23 PERFORMANCE/PAYMENT SECURITY.

The successful Bidder shall promptly acquire and deliver, along with the executed Contract, to the County a good and sufficient performance bond, subject to approval by the County, in a sum equal to 100% of the Contract price to secure faithful performance of the Contract. In lieu of a surety bond, the successful bidder may propose, and the County may permit, the bidder to submit a cashier's check, certified check or cash in the amount of 100% of the contract price. The performance bond must be solely for the protection of the County. The County may permit the successful Bidder to submit a cashier's check or certified check in lieu of all or a portion of the required performance bond.

The successful Bidder shall promptly acquire and deliver a payment bond in an amount equal to the full contract price, solely for the protection of claimants under ORS 279C.600.

Each performance bond and each payment bond must be executed solely by a surety company or companies holding a certificate of authority to transact surety business in this state. The bonds may not constitute the surety obligation of an individual or individuals. The performance and payment bonds must be payable to the County and shall be in a form approved by the County.

4.24 RIGHT TO WAIVE INFORMALITIES AND/OR REJECT BID PROPOSALS.

The County reserves the right to waive minor informalities in the bids received. The County may also reject any Bid not in compliance with all prescribed public contracting procedures and requirements, including the requirement to demonstrate the Bidder's responsibility under 4.22, above, and may reject for good cause any or all bids upon a finding by the County that it is in the public interest to do so, in accordance with OAR 137-049-0440.

4.25 ADDENDA.

4.25.1. The County may change the procurement documents by written Addenda. A Bidder shall provide written acknowledgment of receipt of all issued Addenda with its bid on the Bid Form, unless the County otherwise specified in the Addenda.

4.25.2. The County shall notify prospective Bidders of Addenda. The County will notify bidders of an addendum by posting by EMAIL to all prospective Bidders who have contacted the County and were added to the County's potential contractor list that an addendum has been issued and is available on the County's website. The County will not mail notice of Addenda.

4.25.3. The County shall issue any Addendum within a reasonable time to allow prospective Bidders to consider the Addendum in preparing their bids. The County may extend the Closing if the County determines prospective Bidders need additional time to review and respond to an Addendum. Except to the extent required by public interest, the County shall not issue an Addendum less than 72 hours before the Bid Closing unless the Addendum extends the Closing.

4.25.4. Unless a different deadline is set forth in the Addendum, a Bidder may submit a written request for change or protest to the Addendum, as provided in OAR 137-049-0260, by the close of the County's next business day after issuance of the Addendum, or up to the last day allowed to submit a request for change or protest under OAR 137-049-0260, whichever is later. The County shall consider only

a Bidder's request for change or protest to the Addendum. The County shall not consider a request for change or protest to matters not added or modified by the Addendum, unless the Bidder submits the request for change or protest before the deadline for the County's receipt of request for change or protests as set forth in OAR 137-049-0260(2) and (3).

4.26 PROTEST PROCEDURES.

An adversely affected or aggrieved Bidder may submit a written protest of the County's intent to award within seven (7) days after issuance of the notice of intent to award the contract. The Bidder's protest must be in writing and must specify the grounds upon which the protest is based. A Bidder is adversely affected or aggrieved only if the Bidder is eligible for award of the contract as the responsible Bidder submitting the lowest Responsive Bid and is next in line for award, in accordance with OAR 137-049-0450. The County will not consider a protest submitted after the time period for protests is up. The Board of County Commissioners, or its designee, may settle or resolve a written protest submitted in accordance with the requirements of this section. If a protest is not settled, the Board of County Commissioners, or its designee, shall promptly issue a written decision on the protest. Judicial review of this decision will be available if provided by statute. The successful Bidder shall promptly execute the Contact after the award is final. The County shall execute the Contract only after it has obtained all applicable required documents and approvals.

4.27 PREPARATION COSTS.

All costs associated with Bid preparation shall be at the Bidder's sole cost and expense.

4.28 FIRST-TIER SUBCONTRACTOR DISCLOSURE.

Within two working hours after the Bid Closing, all Bidders shall submit to the person authorized to receive bids, a first-tier subcontractor disclosure, if applicable, on the form provided, identifying any first-tier subcontractors that will be furnishing labor or labor and materials on the Contract, if awarded, whose subcontract value would be equal to or greater than:

1. Five percent (5%) of the total Contract price, but at least $15,000; or

2. $350,000, regardless of the percentage of the total Contract Price.

4.29 REQUEST FOR CLARIFICATION OR CHANGE; SOLICITATION PROTESTS

4.29.1. Clarification. Prior to the deadline for submitting a written request for change or protest, a Bidder may request that the County clarify any provision of the Procurement Documents. The County's clarification to a Bidder, whether orally or in writing, does not change the Procurement Document and is not binding on the County unless the County amends the Procurement Document by Addendum.

4.29.2. Request for Change. A Bidder may request in writing a change to the specifications or Contract terms and conditions. A Bidder must deliver the written request for change to the County not less than ten (10) days prior to Closing. The Request for Change must include a statement of the requested change(s) to the Contract terms and conditions, including any Specifications, together with the reason for the requested change. The Bidder shall mark the Request for Change with "Contract Provision Request for Change-Columbia County Courthouse Roofing Project".

4.29.3. Solicitation Protests. A Bidder may protest Specifications or Contract terms and conditions by delivering a written protest to the County not less than ten (10) days prior to Closing. The Protest shall include a detailed statement of the legal and factual grounds for the Protest, a description of the resulting prejudice to Bidder and a statement of the desired changes to the Contract terms and conditions, including Specifications. The Bidder shall mark the Protest with "Contract Provision

Protest-Columbia County Courthouse Roofing Project".

5. BID FORM

COLUMBIA COUNTY COURTHOUSE ROOFING PROJECT

The undersigned and Bidder declare(s), propose(s) and agree(s) as follows:

1. The undersigned has authority to complete and sign this Bid on behalf of the person, firm, business or corporation named herein as Bidder.

2. The full legal name(s) of the Bidder is

_____

_____

3. The only persons, firms, businesses or corporations interested in this Bid as principals are named as Bidders above or as officers, partners, joint venturers or parties below.

4. This Bid is made without collusion with any person, firm, business or corporation other than those named herein.

5. The Bidder has carefully examined all Procurement Documents (including, but not limited to, the Description of the Project, Instructions to Bidders, Bid Form, First-Tier Subcontractor Disclosure Form, Sample Contract, Special Provisions, Specifications, Oregon Bid Bond, Oregon Performance and Payment Bonds, Drawings and Davis Bacon/Oregon Prevailing Wage Rates), and the site(s) of the proposed work.

6. ADDENDA ACKNOWLEDGEMENT (1) the County reserves the right to make changes to the Invitation to Bid and the resulting Contract, by written Addenda, prior to the closing time and date. Addenda will be sent to all prospective bidders via email and posted on the County's website. The COUNTY is not responsible for a bidder's failure to receive notice of Addenda if such are advertised in the foregoing manner. Addenda shall only be issued by the COUNTY and upon issuance are incorporated into the Invitation to Bid or the resulting Contract. If required by the Addendum, Bidders shall sign and return the Addendum prior to the Closing time/date.

By Bidder's signature on this Bid Form Bidder ACKNOWLEDGES, AGREES and CERTIFIES TO THE FOLLOWING:

(a) If any Addenda are issued in connection with this ITB, Bidder has received and duly considered such Addenda, and has completed the blanks below identifying all Addenda issued, and acknowledging and agreeing to the terms of all such Addenda as those terms revise the terms, conditions, Plans and Specifications of the Procurement Documents.

ADDENDA: No. ___ to No. ___ inclusive.

(b) IN ADDITION to completing the blanks above to identify all Addenda, if any, issued under this ITB, Bidder assigned and returned any Addendum that states that it must be signed and returned.

7. Bidder understands and agrees that this Bid is subject to all of the terms and conditions of the Procurement Documents, and any addenda thereto, and the same are incorporated herein by this reference.

8. If this Bid is accepted, Bidder will:

a) execute the Contract prepared by the Office of County Counsel and made ready for signature, with Columbia County;

b) provide the performance security, if any, specified in the Contract Documents;

c) provide all the necessary labor, machinery, tools, apparatus and other means of construction to do all the work required;

d) furnish all the materials necessary; and

e) do all of the foregoing in the manner and time prescribed in, and according to the requirements set forth in, the Contract Documents.

9. If this Bid is accepted and the Bidder fails to or neglects to execute and return the Contract, prepared and ready for execution, and provide performance and payment security, if required, together with all other required documentation, within ten (10) days from the date of mailing by the County or receipt by the Bidder, whichever is sooner, the County may, at its option, determine that the bidder has abandoned the Contract, declare the bid security described in the Procurement Documents, if any, forfeited, and award the Contract to the next lowest responsible bidder.

10. Bidder will make all the payments to workers, suppliers and agencies required under the Contract in the manner described in the Contract Documents; Bidder will comply with all other applicable provisions of Oregon Law, Columbia County Ordinances and rules relating to public contracting including the provisions of ORS 279C.840 and the Davis Bacon Act (40 U.S.C 3141 to 3148).

11. The Bidder by whom this Bid is submitted, and by whom the contract will be entered into in case award is made to the bidder, is a(n):

Individual / sole proprietorship / partnership / corporation / other_____

(strike out all but correct title).

12. The names, addresses, titles and phone numbers of the president, secretary - treasurer and manager of the bidding corporation or names, addresses, titles and phone numbers of all officers, partners, joint venturers or other parties interested in this Bid are as follows:

(a) Name: _____ Title: _____

Address: _____

Phone: _____

(b) Name: _____ Title: _____

Address: _____

Phone: _____

(c) Name: _____ Title: _____

Address: _____

Phone: _____

(Attach additional sheets if necessary.)

13. The undersigned Bidder certifies that Bidder has not discriminated and will not discriminate against minority, women, or emerging small business enterprises, or a business enterprise that is owned or controlled

by or that employs a disabled veteran in obtaining any required subcontracts. Failure of a Bidder not to so discriminate shall be grounds for disqualification.

14. The undersigned Bidder certifies that Bidder (is / is not) a resident bidder as defined in ORS 279A.120. (Mark out the incorrect certification).

15. The Bidder's Base Bid and Alternates to include all work described in this Procurement Documents, including but not limited to the, Plans, Specifications, sample contract and any issued Addenda:

BASE BID – LUMP SUM: $_____

16. CCB REQUIREMENTS

(a) Bidder shall be licensed with the State of Oregon Construction Contractors Board (CCB) prior to bidding on Public Improvement Contract(s). FAILURE TO COMPLY WITH THIS REQUIREMENT SHALL RESULT IN BID REJECTION.

(b) All subcontractors participating in the project shall be similarly registered with the Construction Contractors Board at the time they propose to engage in subcontract work. The CCB registration requirements apply to all public works contracts unless superseded by federal law.

17. Bidder SHALL provide its Construction Contractors Board (ORS 701.055) registration number below:

CONSTRUCTION CONTRACTORS BOARD REGISTRATION NO.: _____

EXPIRATION DATE OF CCB NO.: _____

18. JOINT VENTURE/PARTNERSHIP DISCLOSURE

The Bidder shall disclose whether the bid is submitted by either a partnership or joint venture.

NO: _____ YES: _____

If yes, the Bidder shall provide the name of the contact person for the partnership or joint venturer.

DATED: _____

BIDDER: _____
(Business Name)

BUSINESS ADDRESS: _____

BY: _____
(Signature of Authorized Representative)

Name: _____
(Printed Name of Signator)

Title: _____

Phone: _____ Fax: _____

BY: _____
(Signature of Second Representative if required)

Name: _____
(Printed Name of Signator)

Title: _____

Federal Tax I.D. No.: _____

(Unless indicated otherwise below, all business communications regarding this Bid and Contract will be made to the business address and phone number shown above.)

If other than above, all communications should be made to:

Alternate Address: _____
Phone: _____

6. FIRST-TIER SUBCONTRACTOR DISCLOSURE FORM.

PROJECT NAME: **Columbia County Courthouse Roofing Project**

BID CLOSING: Date: May 29, 2015 Time: 2:00 p.m. Pacific Time

This form must be submitted at the location specified in the Invitation to Bid on bid closing date and within two working hours after the advertised bid closing.

Instructions for First-Tier Subcontractor Disclosure: Bidders are required to disclose information about certain first-tier subcontractors when the contract value for a Public Improvement is greater than $100,000.00 (see ORS 279C.370). Specifically, when the contract amount of a first-tier subcontractor furnishing labor or labor and materials would be greater than or equal to:

(a) Five (5%) of the project bid, but at least $15,000.00; or
(b) $350,000.00, regardless of the percentage of the total bid.

The disclosure of first-tier subcontractors shall include:

(a) The subcontractor's name;
(b) The category of work that the subcontractor would be performing; and
(c) The dollar value of the subcontract.

If the Bidder will not be using any subcontractors that are subject to the above disclosure requirements, the Bidder is required to indicate "None" on the form, below. THE COUNTY MUST REJECT A BID IF THE BIDDER FAILS TO SUBMIT THE DISCLOSURE FORM WITH THIS INFORMATION BY THE STATED DEADLINE (See OAR 137-049-0360)

List below the name of each subcontractor that will be furnishing labor or will be furnishing labor and materials and that is required to be disclosed, the category of work that the subcontractor will be performing and the dollar value of the subcontract. Enter "NONE" if there are no subcontractors that need to be disclosed. (ATTACH ADDITIONAL SHEETS IF NEEDED.)

NAME	DOLLAR VALUE	CATEGORY OF WORK
1) _____	$ _____	_____
2) _____	$ _____	_____
3) _____	$ _____	_____
4) _____	$ _____	_____

Failure to submit this form by the disclosure deadline will result in a nonresponsive bid. A nonresponsive bid will not be considered for award.

Form submitted by (bidder name):_____

Contact name: _____

Phone no.: _____

7. OREGON BID BOND

BOND NO. _____

AMOUNT: $_____

KNOW ALL MEN BY THESE PRESENTS, that _____ hereinafter called the PRINCIPAL, and _____ a corporation duly organized under the laws of the State of _____, having its principal place of business at _____, in the State of _____ and authorized to do business in the State of Oregon, as SURETY, are held and firmly bound unto Columbia County hereinafter called the OBLIGEE, in the sum of _____ _____ DOLLARS ($_____), for the payment of which we bind ourselves, our heirs, executors, administrators, successors, and assigns, jointly and severally, firmly by these presents.

THE CONDITION OF THIS BOND IS SUCH THAT:

WHEREAS, the PRINCIPAL is herewith submitting his or its Bid Proposal for the Columbia County Courthouse Roofing Project, said Bid Proposal, by reference thereto, being hereby made a part hereof.

NOW, THEREFORE, if the Bid Proposal submitted by the PRINCIPAL is accepted, and the Contract awarded to the PRINCIPAL, and if the PRINCIPAL shall execute the proposed Contract and shall furnish such Performance and Payment Bond as required by the Contract Documents within the time fixed by the Documents, then this obligation shall be void, if the PRINCIPAL shall fail to execute the proposed Contract and furnish the bond, the SURETY hereby agrees to pay to the OBLIGEE the said sum as liquidated damages.

Signed and sealed this _____ day of _____, 2015.

_____
PRINCIPAL

By _____

_____
SURETY

By _____
Attorney-in-Fact

8. OREGON PERFORMANCE BOND

BOND NO. _____ AMOUNT: $_____

KNOW ALL BY THESE PRESENT, that _____as CONTRACTOR (Principal), and _____ a corporation, duly authorized to do a general surety business in the State of Oregon, as SURETY, are jointly and severally held and bound unto **Columbia County, Oregon**, a political subdivision of the State of Oregon the OWNER (Obligee) herein, in the sum of _____DOLLARS ($_____), for the payment of which we bind ourselves, our heirs, executors, administrators, successors, and assigns, jointly and severally, firmly by these presents.

This bond is executed under the authority of ORS Chapter 279C, of the State of Oregon, the provisions of which are hereby incorporated into this bond and made a part hereof.

THE CONDITION OF THIS OBLIGATION IS SUCH THAT:

WHEREAS, _____ the CONTRACTOR entered into a certain Contract with Columbia County, Oregon for the **Columbia County Courthouse Roofing Project**.

IN WITNESS;
NOW, THEREFORE, if the CONTRACTOR shall faithfully perform all the provisions of such Contract for the duration thereof, including the guarantee period, and promptly pay all laborers, mechanics, subcontractors, material men, and all persons who shall supply such work and services, and save harmless the OWNER, its officers, agents, and employees from all claims therefore, or from any claim for damages or injury to property or persons arising by reason of the work; and shall, in time and manner, faithfully do, perform, and furnish all matters and things as by them in the Contract undertaken, and as by law, local, state, and federal, prescribed, then this obligation shall be void; otherwise it shall remain in full force and effect.

PROVIDED, HOWEVER:

In no event shall the SURETY be liable for a greater sum than the obligation of this bond.

The SURETY for the value received, hereby stipulates and agrees that no change, extension of time, alteration, or addition to the terms of the Contract, or to the work to be performed thereunder, or the Specifications accompanying the same, shall in any way affect its obligations on this bond, and it does hereby waive notice of any such change, extension of time, alteration, or addition to the terms of the Contract, or to the work, or to the Contract Documents.

Signed and sealed this _____ day of _____, 2015.

_____ (SEAL)

_____
CONTRACTOR

_____
SURETY
By: _____
Attorney-In-Fact

Approved as to Form: _____, 2015

_____, OWNER

By _____

9. OREGON PAYMENT BOND

BOND NO. _____

AMOUNT: $_____

KNOW ALL BY THESE PRESENT, that _____ as CONTRACTOR (Principal), and _____, a corporation, duly authorized to do a general surety business in the State of Oregon, as SURETY, are jointly and severally held and bound unto **Columbia County**, a political subdivision of the State of Oregon, the OWNER (Obligee) herein, in the sum of _____ _____ DOLLARS ($_____), for the payment of which we bind ourselves, our heirs, executors, administrators, successors, and assigns, jointly and severally, firmly by these presents.

This bond is executed under the authority of ORS Chapter 279C, of the State of Oregon, the provisions of which are hereby incorporated into this bond and made a part hereof.

THE CONDITION OF THIS OBLIGATION IS SUCH THAT:

WHEREAS, _____the CONTRACTOR entered into a certain Contract with **Columbia County, Oregon**, for the Columbia County Courthouse Roofing Project;

IN WITNESS;

NOW, THEREFORE, if the CONTRACTOR shall faithfully perform all the provisions of such Contract for the duration thereof, including the guarantee period, and promptly pay all laborers, mechanics, subcontractors, material men, and all persons who shall supply such work and services, and save harmless the OWNER, its officers, agents, and employees from all claims therefore, or from any claim for damages or injury to property or persons arising by reason of the work; and shall, in time and manner, faithfully do, perform, and furnish all matters and things as by them in the Contract undertaken, and as by law, local, state, and federal, prescribed, then this obligation shall be void; otherwise it shall remain in full force and effect.

PROVIDED, HOWEVER:

In no event shall the SURETY be liable for a greater sum than the obligation of this bond.

The SURETY for the value received, hereby stipulates and agrees that no change, extension of time, alteration, or addition to the terms of the Contract, or to the work to be performed thereunder, or the Specifications accompanying the same, shall in any way affect its obligations on this bond, and it does hereby waive notice of any such change, extension of time, alteration, or addition to the terms of the Contract, or to the work, or to the Contract Documents.

Signed and sealed this _____ day of _____, 2015.

_____ (SEAL)

_____
CONTRACTOR

_____
SURETY
By: _____
Attorney-In-Fact

Approved as to Form: _____, 2015.

_____, OWNER

By: _____

10. **SPECIAL PROVISIONS.**

(For purposes of these Special Provisions, "Bidder" is referred to herein as "CONTRACTOR", and "Project" is referred to as "Contract").

SECTION 1. STANDARD OF WORKMANSHIP.

The standard of workmanship for this Contract shall meet or exceed those provided by the Procurement Documents for this Contract.

SECTION 2. MATERIALS.

The materials used in this Contract shall meet or exceed those stated in the Procurement Documents. However, prior approval by the COUNTY must be obtained before deviating from the materials, if any, prescribed in the Specifications. See Section 4.5.5 regarding materials identified by brand name.

SECTION 3. EXAMINATION OF LOCATION AND CONDITIONS.

It is understood that CONTRACTOR, prior to signing this Contract, has made a careful examination of the contents of the Procurement Documents and has obtained complete information as to the quantity, locality and character of work to be performed hereunder. CONTRACTOR has, by careful examination, satisfied himself/herself as to the nature and location of the work, the confirmation of the ground, the character of equipment, and facilities needed preliminary to and during the prosecution of the work, the general and local conditions, and all other matters which can in any way affect the work under this Contract. COUNTY in no case will be responsible for any loss or cost that may be suffered by CONTRACTOR as a consequence of the failure by CONTRACTOR to be so informed.

SECTION 4. ORDER AND PROGRESS OF WORK

The work under this Contract shall be planned and conducted in such a manner and with such forces as to secure completion within the time allotted. The order and sequence of the work and its general conduct shall be subject to approval of the COUNTY, which shall, however, not affect or diminish the full responsibility of the CONTRACTOR for the work.

SECTION 5. SCOPE OF WORK.

The intent of this Contract is to provide for the execution and completion in every detail of the work described herein. Except as herein otherwise specified, the CONTRACTOR shall furnish all labor, tools, implements, machinery, supplies, materials and incidentals, and shall do all things necessary to perform and complete, according to the Specifications, the work to be done under this Contract. This shall be understood to include, in addition to the work specifically called for in the Specifications, the performance of such additional and extra work as may appear to the COUNTY to be necessary for the completion of the work contemplated in a substantial and workmanlike manner.

SECTION 6. COMMENCEMENT OF WORK.

Upon award of the Contract by COUNTY, the CONTRACTOR shall furnish COUNTY the following:

a. Duplicate originals of this Contract duly executed by CONTRACTOR.

b. Evidence of having secured any permits or licenses, payment of any fees or charges and posting of any notices as may be required by law.

c. A list of proposed subcontractors, if any, subject to County approval pursuant to Section 18 below.

d. The Payment Bond, Performance Bond and Certificates of Insurance required by Sections 7, 14 and 22 of the Contract.

Upon receipt of the above, the COUNTY will determine whether to approve the Contract. No work shall commence until the COUNTY has approved, dated and executed the duplicate original Contracts and authorized CONTRACTOR to begin work with a notice to proceed. The COUNTY shall not be responsible for delay by CONTRACTOR in supplying the necessary items described above in this section and any such delay shall not be grounds for extension of the completion date specified herein.

SECTION 7. INSURANCE.

a. CONTRACTOR, and any subcontractors, shall secure and maintain during the entire course of this Contract, and any extension hereof, **commercial general liability insurance coverage** from an insurance company authorized to do business in Oregon. The policy shall name Columbia County, its officers, agents and employees as additional named insureds. The insurance limits shall be not less than $2,000,000 per occurrence for bodily injury and property damage.

b. CONTRACTOR, and any subcontractors shall secure and maintain during the entire course of this Contract, and any extension hereof, **liability insurance covering each automobile** utilized in performance of the agreement from an insurance company authorized to do business in the State of Oregon. The policy shall name Columbia County, its officers, agents and employees as additional named insured. Unless otherwise provided in the Special Provisions, the insurance limits shall be not less than $2,000,000 per occurrence for bodily injury and property damage.

c. CONTRACTOR, and any subcontractors, shall secure and maintain during the entire course of this Contract, and any extension hereof, **workers' compensation and employer's liability insurance** meeting statutory limits mandated by State and federal law.

d. Prior to commencing work, the CONTRACTOR, and any subcontractors, shall **furnish certificates of insurance**, including workers' compensation insurance, as evidence of the insurance coverage required by this Contract. The policy shall name Columbia County, its officers, agents and employees as additional named insured. Contractor agrees to provide County at least thirty (30) days prior written notice of cancellation, non-renewal or a material change of the insurance. With the exception of policies for workers' compensation, certificates of insurance shall be accompanied by additional insured endorsements, evidencing coverage is extended to Columbia County and its officers, agents and employees as an additional insured. The additional insured endorsement shall not be limited to on-going operations nor shall it exclude claims brought by an additional insured. The additional insured endorsement shall be primary and non-contributory to any other insurance available to the additional insured.

e. Coverage shall be carried for the duration of the applicable statute of repose in Oregon.

f. All of CONTRACTOR's and subcontractor's liability insurance policies, with the exception of worker's compensation, shall contain a waiver of subrogation against the County.

SECTION 8. INSPECTION.

This Contract is to be executed under the supervision of the Project Manager, who will act under instruction of the Board of County Commissioners. The Project Manager may provide for the inspection, by assistants and inspectors under his/her direction, of all materials used and all work done under this project. No deviation from the specifications for this project shall be made by the CONTRACTOR without first obtaining the consent and approval of the Project Manager. The Project Manager and his/her inspectors shall have free access to all information relating to the work and materials for the project which the Project Manager may deem necessary or pertinent and with such samples as may be required. The CONTRACTOR shall, at his/her own expense, supply the inspectors with such labor assistance as may be necessary in handling of materials for proper inspection and, in case the CONTRACTOR neglects or refuses to do so, such labor as may be necessary shall be employed by the COUNTY and the expense so incurred shall be deducted from the money then due, or which may become thereafter due the CONTRACTOR. Inspectors shall have authority to reject defective material and to suspend any work that is being done improperly, subject to final decision of the COUNTY. Inspectors shall have no authority to permit deviations from, or to relax, any of the provisions of these Specifications nor to delay the CONTRACTOR by failure to inspect materials and work with reasonable promptness. The COUNTY during the actual progress of the work, shall furnish the CONTRACTOR with such detailed drawing as may be necessary to more fully illustrate the work, and all such drawings shall be considered a part of the Specifications of the project.

The payment of compensation, whatever may be its character or form, or the giving of any gratuity, or the granting of any valuable favor by the CONTRACTOR to any inspector, directly or indirectly, is expressly prohibited, and any such act on the part of the CONTRACTOR will constitute a violation of this Contract.

SECTION 9. ALTERATIONS IN DETAIL.

COUNTY reserves the right to make, at any time during the progress of the work to be done, such changes or alterations as may be found to be necessary or desirable; provided, however, such changes or alterations shall not change the character of the work to be done, nor increase the cost thereof unless the change and cost increase is approved in writing by the CONTRACTOR prior to the execution of the additional work. Any changes or alterations so made shall not invalidate this Contract nor release the surety of CONTRACTOR on the Performance Bond, and CONTRACTOR agrees to do the work as changed or altered as if it had been a part of the original Contract.

SECTION 10. DISCHARGE OF EMPLOYEES.

Any employee of the CONTRACTOR whose work is unsatisfactory to the COUNTY shall be discharged or reassigned by CONTRACTOR and not allowed to work on the job again without written consent of the COUNTY.

SECTION 11. PUBLIC CONVENIENCE.

The project is located on the site of the Columbia County Courthouse. During the progress of the work, the convenience of County personnel and the general public must be provided for as far as practical. The CONTRACTOR shall accommodate any need for access, and circulation to the Columbia County Courthouse by County personnel and the general public.

SECTION 12. PROTECTION OF PROPERTY AND PERSONS.

a. The CONTRACTOR shall, at his/her own expense, provide, erect and maintain at all times during the progress of the work, suitable barricades, fences, signs, or other adequate protection, and shall provide and maintain such lights, signals and flaggers as may be necessary or as may be ordered by the COUNTY to insure the safety of the public, and the protection of the work and those engaged in connection

with the work.

b. The CONTRACTOR shall continuously maintain adequate protection of all areas near the work from damage and shall protect the COUNTY'S property from unintended loss arising in connection with this agreement. CONTRACTOR shall adequately protect adjacent property as provided by law, regulations and industry practice. The CONTRACTOR shall make good any such damage, injury or loss, except such as may be directly caused by agents or employees of the COUNTY.

c. The CONTRACTOR shall protect from damage to all buildings, trees, shrubs, lawns and all landscape work indicated or directed to remain. Any such property damaged shall be repaired or replaced at the CONTRACTOR'S expense.

SECTION 13. CLEANING UP.

The CONTRACTOR shall remove all debris and excess materials from the work site.

Upon the completion of the work, and before acceptance and final payment shall be made, the CONTRACTOR shall clean up and remove from the work site, all surplus and discarded materials, rubbish and debris of all kind. CONTRACTOR shall restore in an acceptable manner all property, both public and private which has been damaged during the prosecution of the work, and shall leave the work site in a neat and orderly condition to the satisfaction of the COUNTY.

SECTION 14. EXTENSION OF TIME.

With reference to the Contract time originally given in the proposal and Contract, the CONTRACTOR can request the COUNTY to extend the original time limit. If the COUNTY agrees that an extension should be granted because of an unforeseen reason, the original time limit will be extended by the amount of days the CONTRACTOR is prevented from performing work under the Contract for one or another of the following causes or reasons:

a. Acts of God, such as an earthquake, flood, cloudburst, tornado, hurricane or other phenomenon of nature of catastrophic proportions or intensity.

b. Epidemics, quarantine restrictions, strikes, labor disputes, freight embargoes and acts of public enemy.

c. Periods when the work is temporarily suspended upon written order of the COUNTY.

SECTION 15. ADJUSTMENT OF CONTRACT.

Notwithstanding any other provisions of this Contract, COUNTY may, pursuant to Oregon law, make adjustments in the Contract when material effect upon the work to be done under the Contract is caused by major catastrophes or disasters resulting from acts of God, windstorms, floods, fire, or other acts of nature, which are beyond the control of the CONTRACTOR and in no way connected with negligent acts or omissions of CONTRACTOR or the representatives, employees or assignees of CONTRACTOR. Such adjustments may be made to place the parties in their original status under the Contract, insofar as possible, provided, however, that any loss or cost to CONTRACTOR is in no way recoverable from third parties through action or otherwise by CONTRACTOR, and provided further that CONTRACTOR make written application to COUNTY within thirty (30) days after the event.

SECTION 16. CAUSES BEYOND CONTROL.

In the event CONTRACTOR is prevented by cause or causes beyond control of CONTRACTOR from performing any obligation of this Contract, such non-performance shall not be deemed to be a breach of this

Contract such as to render CONTRACTOR liable for damages therefor or to give rise to the cancellation thereof; provided, that if and when such cause or causes shall cease to prevent such performance, CONTRACTOR shall exercise all reasonable diligence to resume and complete performance of such obligation with the least possible delay. By "cause or causes beyond control"' as used in this section is meant any one or more of the following causes affecting operations of CONTRACTOR: fire or other casualties and accidents; strikes, riots and civil commotions; wars and acts of public enemies; storms, floods and other unusual climatic conditions, including droughts and low humidity, or orders of duly constituted public, authorities; and acts of God and other similar circumstances beyond the control of the CONTRACTOR.

SECTION 17. DEFAULT.

If at any time the CONTRACTOR shall violate any of the provisions of this Contract, or shall neglect or refuse to prosecute the work with reasonable diligence, or should refuse or neglect to perform the work according to the Contract Documents, COUNTY may give CONTRACTOR a written notice setting forth with reasonable particularity the default, deficiency or failure to comply with the Contract or this clause. In addition, the COUNTY may suspend any further operations of CONTRACTOR under this Contract, except such operations as may be necessary to remedy any violations. If the CONTRACTOR fails to correct such deficiency within a period of ten (10) calendar days after receipt of such notice, or, in the event corrective work shall take a longer period of time, to begin corrective measures within ten (10) calendar days and proceed thereafter with due diligence, the CONTRACTOR shall be in default. COUNTY shall thereafter have the right, without further notice to the CONTRACTOR, and without voiding the Contract to take possession of all materials, to complete work, and to charge the cost of so doing against CONTRACTOR. If such expenses shall exceed the balance due the CONTRACTOR, CONTRACTOR and Surety on its bond provided for herein agree to pay the excess to COUNTY. The determination by the COUNTY of a question as to whether any of the terms of the Contract or Specifications have been violated, or have not been performed satisfactorily, shall be appealable to the Board of County Commissioners whose decision shall be conclusive upon the CONTRACTOR and his or her surety, and any and all other parties who may have any interest in the Contract or any portion thereof.

The foregoing provisions of this section shall be in addition to all other rights and remedies available to the COUNTY under law.

SECTION 18. SUBCONTRACTING.

No portion of the Contract shall be sublet, subcontracted or performed by others than the CONTRACTOR'S own organization except with the written consent of the COUNTY. Requests for permission to sublet or subcontract any portion of the Contract or to have any of the work performed by others than his/her own organization shall be in writing and accompanied by a showing that the organization, which will perform the work, is particularly experienced and equipped for such work. The CONTRACTOR shall perform with his/her own organization contract work amounting to not less than fifty (50%) percent of the amount of the Contract as awarded. The term "CONTRACTOR'S OWN ORGANIZATION" shall be construed to include only workers employed and paid directly by CONTRACTOR and equipment owned or rented by him/her. The CONTRACTOR shall, prior to commencing work; notify the COUNTY in writing of the names of any subcontractors and supplier of materials for the project. If subcontractors are to be used on this Contract, such subcontractors shall be bound by all of the provisions of this Contract including the requirement to supply certificates of insurance as provided in Section 7 above. Other subcontracting provisions are found in ORS 279C.370 and are listed below

SECTION 19. LIABILITY OF PUBLIC OFFICIALS.

In carrying out of any of the provisions of this Contract, or in exercising any power of authority granted under this Contract, there will be no liability on the Columbia County Board of Commissioners, members of said board and its officers, agents, employees and authorized representatives of the Board, either personally

or as officials of the COUNTY, it always being understood that in such matters they act solely as agents and representatives of Columbia County.

SECTION 20. LAWS, REGULATIONS AND ORDERS.

CONTRACTOR at all times shall observe and comply with all federal and state laws, administrative rules and regulations issued there under, and local ordinances, orders, rules and regulations, which in any manner affect the activities of CONTRACTOR under this Contract, and further, shall observe and comply with all orders or decrees as exist at present and those which may be enacted later by bodies of tribunals having any jurisdiction or authority over such activities of CONTRACTOR.

Payment for work under this Contract after June 30 of any given year is subject to funds being budgeted by the Columbia County Budget Committee. This Contract is subject to the provisions of ORS Chapter 279C (Public Contracting), ORS Chapter 294 (Local Budget Law), Article XI, Section 10 of the Oregon Constitution and any and all Oregon statutes and Columbia County ordinances and rules relating to public contracting.

SECTION 21. SUSPENSION OF ACTIVITIES.

COUNTY shall have the authority to suspend, wholly or in part, the activities of CONTRACTOR and assignees of CONTRACTOR under this contract for such period or periods of time as COUNTY may deem necessary to protect the public interest.

SECTION 22. ADVANCE PAYMENTS TO CONTRACTOR.

Upon request by CONTRACTOR to be paid for completion of part of the total work to be done hereunder, COUNTY may make such payment, if in the sole opinion of COUNTY the work has been satisfactorily completed and the quantity of work can be verified.

The request from CONTRACTOR for such advance payment must be in writing and include a statement showing the quantity of work completed and the amount payable for such work at the contract unit price.

SECTION 23. NON-DISCRIMINATION.

The CONTRACTOR shall comply with the provisions of Chapter 659, Oregon Revised Statutes, which prohibits unlawful employment practices and discrimination by employers against any employee or applicant for employment because of race, religion, color, sex, national origin, marital status or age, or because of an expunged juvenile record. Particular reference is made to ORS 659.030 which states that it is an unlawful employment practice for an employer, because of race, religion, color, sex, national origin, marital status or age if the individual is 18 years of age or older, or because of an expunged juvenile record, to refuse to hire or employ, or to bar or discharge from employment such individual or to discriminate against such individual in compensation or in terms, conditions, or privileges of employment.

SECTION 24. LIQUIDATED DAMAGES.

In the event all of the work required under this Contract is not completed within the time specified in the Contract or any lawful extension thereof, CONTRACTOR agrees that damage will be sustained by COUNTY as a result, but to definitely determine and ascertain the actual amount of damages either before or after the occurrence thereof would be difficult and impractical. The sum stated herein for liquidated damages for each and every calendar day that completion of the work is delayed beyond the prescribed final completion date or lawful extension thereof is hereby stipulated as being the nearest and most exact measure of such damage that can be fixed at this or any subsequent time. When assessed by the COUNTY, CONTRACTOR shall become liable for and pay to the COUNTY as liquidated damages and not as a penalty said sum per day for each and every calendar day of delay. It is agreed by the parties to the Contract, that the

amount of liquidated damages shall be One Thousand Dollars ($1000) per day for each and every calendar day of such delay. The amount of such liquidated damages may be deducted by the contracting agency from any compensation due or that may become due under this Contract and the CONTRACTOR and his or her surety shall be liable for any excess damages due.

In the event CONTRACTOR is directed to perform extra or additional work, the number of calendar days specified in the Contract shall be extended by an amount determined by application to the original number of calendar days of the ratio that the value of the extra additional work bears to the original contract value.

Liquidated damages shall not be assessed for any delays caused by the default, act or omission of COUNTY, the State, public enemy or act of God, or as provided in Sections 14, 16, and/or 21 of the Special Provisions, providing CONTRACTOR shall within ten (10) days subsequent to the beginning of any such delay, file a written report as to the cause thereof with the County Representative, whose findings in connection therewith shall be final and conclusive.

SECTION 25. TIME OF ESSENCE.

The parties agree that time is of the essence in this agreement. Work shall take place beginning upon notice to proceed and ending no later than July 20, 2015.

Attachment A: Oregon & Federal Prevailing Wage Rates

This contract calls for the construction of a "public work" ORS 279C.800 The Act requires contractors and subcontractors to pay laborers, workers and mechanics performing services on public work projects no less that the "prevailing rate of wages" (hourly cash wages plus fringe benefits) in the county where the work is performed. For information regarding Oregon Prevailing wage, current prevailing wage rates, please refer to Oregon Department of Labor's website.

All contractors and subcontractors rendering services under this contract must comply with all requirements of this Act, including but not limited to, all wage, notice and record keeping duties as well as certification of weekly payroll.

The following pages are provided as an example and for your convenience:

Clatsop, Columbia and Tillamook County wage tables
Trade Appendix pages

REGION #1
Clatsop, Columbia and Tillamook Counties

Using the booklet, Definitions of Covered Occupations, find the definition that most closely matches the actual work being performed by the worker.

OCCUPATION	BASIC HOURLY RATE	FRINGE RATE
Asbestos Worker/Insulator	See Appendix	See Appendix
Boilermaker	See Appendix	See Appendix
Bricklayer/Stonemason	See Appendix	See Appendix
Bridge and Highway Carpenter (See Carpenter Group 5)	See Appendix	See Appendix
Carpenter Group 1 & 2	See Appendix	See Appendix
Cement Mason	See Appendix	See Appendix
Diver	See Appendix	See Appendix
Diver Tender	See Appendix	See Appendix
Dredger	See Appendix	See Appendix
Drywall, Lather, Acoustical Carpenter & Ceiling Installer	See Appendix	See Appendix
Drywall Taper (See Painter & Drywall Taper)	See Appendix	See Appendix
Electrician	See Appendix	See Appendix
Elevator Constructor, Installer and Mechanic	See Appendix	See Appendix
Fence Constructor (Non-metal)	$23.64	$10.02
Fence Erector (Metal)	$20.50	$5.09
Flagger (See Laborer Group 3)	See Appendix	See Appendix
Glazier	See Appendix	See Appendix
Hazardous Materials Handler/Mechanic	See Appendix	See Appendix
Highway and Parking Striper	$26.11	$8.20
Ironworker	See Appendix	See Appendix
Laborer Group 1	See Appendix	See Appendix
Laborer Group 2	See Appendix	See Appendix
Laborer Group 3	See Appendix	See Appendix
Landscape Laborer/Technician	$16.94	$4.00
Limited Energy Electrician	$28.50	$8.76
Line Constructor	See Appendix	See Appendix
Marble Setter	See Appendix	See Appendix
Millwright Group 1 & 2 (See Carpenter Group 3 & 4)	See Appendix	See Appendix
Painter	$21.52	$7.13
Piledriver	$33.81	$14.59
Plasterer and Stucco Mason	See Appendix	See Appendix
Plumber/Pipefitter/Steamfitter	See Appendix	See Appendix
Power Equipment Operator Group 1	See Appendix	See Appendix
Power Equipment Operator Group 1A	See Appendix	See Appendix
Power Equipment Operator Group 1B	See Appendix	See Appendix
Power Equipment Operator Group 2	See Appendix	See Appendix
Power Equipment Operator Group 3	See Appendix	See Appendix
Power Equipment Operator Group 4	See Appendix	See Appendix
Power Equipment Operator Group 5	See Appendix	See Appendix
Power Equipment Operator Group 6	See Appendix	See Appendix

REGION # 1
Clatsop, Columbia and Tillamook Counties

Using the booklet, Definitions of Covered Occupations, find the definition that most closely matches the actual work being performed by the worker.

OCCUPATION	BASIC HOURLY RATE	FRINGE RATE
Roofer	See Appendix	See Appendix
Sheet Metal Worker	See Appendix	See Appendix
Soft Floor Layer	$24.43	$9.40
Sprinkler Fitter	See Appendix	See Appendix
Tender to Mason Trades (Brick and Stonemason, Mortar Mixer, Hod Carrier)	See Appendix	See Appendix
Tender to Plasterer and Stucco Mason	$17.35	$12.74
Testing, Adjusting, and Balancing (TAB) Technician	$30.72	$8.02
Tilesetter/Terrazzo Worker: Hard Tilesetter	See Appendix	See Appendix
Tile, Terrazzo, and Marble Finisher	See Appendix	See Appendix
Truck Driver – All Groups	$20.10	$6.21

TRADE	BASIC HOURLY RATE	HOURLY FRINGE RATE

LABORER

Zone 1 (Base Rate):

Group 1	**26.43**	**13.10**
Group 2	**27.44**	**13.10**
Group 3	**22.86**	**13.10**

Note: A Hazardous Waste Removal Differential must be added to the base rate if work is performed inside the boundary of a Federally Designated Hazardous Waste Site. A Group 1 base rate is used for General Laborer on such a site. For further information on this, call the Prevailing Wage Rate Coordinator at (971) 673-0839.

Zone Differential for Laborers
(Add to Zone 1 Base Rate)

Zone 2	**.65**
Zone 3	**1.15**
Zone 4	**1.70**
Zone 5	**2.75**

Zone 1: Projects located within 30 miles of city hall in the reference cities listed below.
Zone 2: More than 30 miles but less than 40 miles.
Zone 3: More than 40 miles but less than 50 miles.
Zone 4: More than 50 miles but less than 80 miles.
Zone 5: More than 80 miles.

Reference Cities

Albany	Burns	Hermiston	Roseburg
Astoria	Coos Bay	Klamath Falls	Salem
Baker City	Eugene	Medford	The Dalles
Bend	Grants Pass	Portland	

Note: All job or project locations shall be computed (determined) on the basis of road miles and in the following manner. A mileage measurement will start at the entrance to the respective city hall, facing the project (if possible), and shall proceed by the normal route (shortest time, best road) to the geographical center on the highway, railroad, and street construction projects (end of measurement). On all other project contracts, the geographical center where the major portion of the construction is located, shall be considered the center of the project (end measurement).

LIMITED ENERGY ELECTRICIAN

	BASIC HOURLY RATE	HOURLY FRINGE RATE
Area 1	**18.90**	**8.20**

Reference Counties Area 1

Malheur

Area 2	**28.75**	**14.96**	

Reference Counties Area 2

Baker	Grant	Umatilla	Wallowa
Gilliam	Morrow	Union	Wheeler

Area 3	**25.95**	**13.03**	

Reference Counties Area 3

Coos	Douglas (a)	Lincoln
Curry	Lane (a)	

(a) Those portions of Lane and Douglas lying **west** of a line running North and South from the NE corner of Coos County to the SE corner of Lincoln County.

Area 4	**27.54**	**13.33**

Reference Counties Area 4

Benton	Jefferson	Marion
Crook	Lane (b)	Polk
Deschutes	Linn	Yamhill (c)

(b) That portion of Lane County lying **east** of a line running North and South from the NE corner of Coos County to the SE corner of Lincoln County.

(c) South half

Area 5	**29.75**	**15.69**

Reference Counties Area 5

Clackamas	Hood River	Tillamook	Yamhill (d)
Clatsop	Multnomah	Wasco	
Columbia	Sherman	Washington	

(d) North Half

TRADE	BASIC HOURLY RATE	HOURLY FRINGE RATE	TRADE	BASIC HOURLY RATE	HOURLY FRINGE RATE

POWER EQUIPMENT OPERATOR (continued)

Reference cities for projects in all remaining counties:

Albany	Coos Bay	Grants Pass	Medford
Bend	Eugene	Klamath Falls	Roseburg

(A) All jobs or projects located within 30 miles of the respective city hall of the above mentioned cities shall receive Zone 1 pay for all classifications.

(B) All jobs or projects located more than 30 miles and less than 50 miles from the respective city hall of the above mentioned cities shall receive Zone 2 for all classifications.

(C) All jobs or projects located more than 50 miles from the respective city hall of the above mentioned cities shall receive Zone 3 pay for all classifications.

Note: All job or project locations shall be computed (determined) on the basis of road miles and in the following manner. A mileage measurement will start at the entrance to the respective city hall, facing the project (if possible), and shall proceed by the normal route (shortest time-best road) to the geographical center on the highway, railroad, and street construction projects (end of measurement). On all other project contracts, the geographical center where the major portion of the construction is located, shall be considered the center of the project (end measurement).

ROOFER

Area 1*

Roofer	**28.03**	**12.76**
Handling coal tar pitch	**30.83**	**12.76**
Remove fiberglass insulation	**30.83**	**12.76**

Reference Counties Area 1

Baker	Gilliam	Multnomah	Washington
Clackamas	Grant	Sherman	Wheeler
Clatsop	Hood River	Tillamook	
Columbia	Jefferson	Wasco	

*On all jobs on which coal tar pitch is the basic roofing material or where the old roof being removed is composed of coal tar based material, a rate of pay ten percent (10%) greater than the basic rate of pay shall be paid for all work performed.

ROOFER (continued)

*All employees engaged in removing fiberglass insulation shall receive a rate of pay ten percent (10%) greater than the employee's basic rate of pay.

Area 2

Roofer	**24.19**	**12.48**
Handling coal tar pitch	**26.19**	**12.48**
Remove fiberglass insulation	**25.69**	**12.48**

Reference Counties Area 2

Benton	Douglas	Lake	Marion
Coos	Harney	Lane	Polk
Crook	Jackson	Lincoln	Yamhill
Curry	Josephine	Linn	
Deschutes	Klamath	Malheur	

(Add $2.00 to basic hourly rate for application, spudding and cutting or removal of coal tar products)

(Add $0.50 per hour to base hourly rate for application, spudding and cutting or removal of fiberglass insulation)

Area 4

Roofers	**25.57**	**10.22**

Reference Counties Area 4

Umatilla Union Wallowa

(Add $2.00 to basic hourly rate for employees working with irritable bituminous materials)

(Add $2.00 to basic hourly rate for employees removing fiberglass insulation)

Area 5

Roofers	**25.38**	**10.27**

Reference County for Area 5

Morrow

(Add $3.00 to basic hourly rate for employees working with irritable and pitch bituminous materials)

TRADE	BASIC HOURLY RATE	HOURLY FRINGE RATE
SHEET METAL WORKER		
Area 1	**37.13**	**18.65**

Reference Counties Area 1

Benton	Grant	Multnomah	Washington
Clackamas	Hood River	Polk	Wheeler
Clatsop	Lincoln	Sherman	Yamhill
Columbia	Linn	Tillamook	
Gilliam	Marion	Wasco	

(Add $1.00 to base rate for work performed on any swinging platform, swinging chair or swinging ladder)

(Add $1.00 to base rate for work where a worker is exposed to resins, chemicals or acid)

Area 2	**23.75**	**16.11**

Reference Counties Area 2

Baker Malheur

Area 3	**33.33**	**19.46**

Reference Counties Area 3

Morrow Umatilla Union Wallowa

(Add $1.00 per hour to base rate for work where it is necessary to wear a chemically activated type face mask)

Area 4	**31.17**	**16.75**

Reference Counties Area 4

Douglas Lane

(Add $1.00 to base rate for work performed on any swinging platform, swinging chair or swinging ladder)

(Add $1.00 to base rate for work where a worker is exposed to resins, chemicals or acid)

TRADE	BASIC HOURLY RATE	HOURLY FRINGE RATE
SHEET METAL WORKER (continued)		
Area 5	**30.99**	**17.80**

Reference Counties Area 5

Coos

(Add $1.00 to base rate for work performed on any swinging platform, swinging chair or swinging ladder)

(Add $1.00 to base rate for work where a worker is exposed to resins, chemicals or acid)

Area 6	**26.56**	**15.92**

Reference Counties Area 6

Curry	Jackson	Klamath
Harney	Josephine	Lake

(Add $1.00 to base rate for work performed on any swinging platform, swinging chair or swinging ladder)

(Add $1.00 to base rate for work where a worker is exposed to resins, chemicals or acid)

Area 7	**28.98**	**15.72**

Reference Counties Area 7

Crook Deschutes Jefferson

(Add $1.00 to base rate for work performed on any swinging platform, swinging chair or swinging ladder)

(Add $1.00 to base rate for work where a worker is exposed to resins, chemicals or acid)

SOFT FLOOR LAYER	**26.21**	**14.70**

Attachment B: Specifications and Drawings

3-Part Specification
Division 07 54 19 - Polyvinyl-Chloride Roofing

Annex Roof

230 Strand Street
St. Helens, OR 97051

Re roof

Prepared By: Casey Garrett
Columbia County Oregon

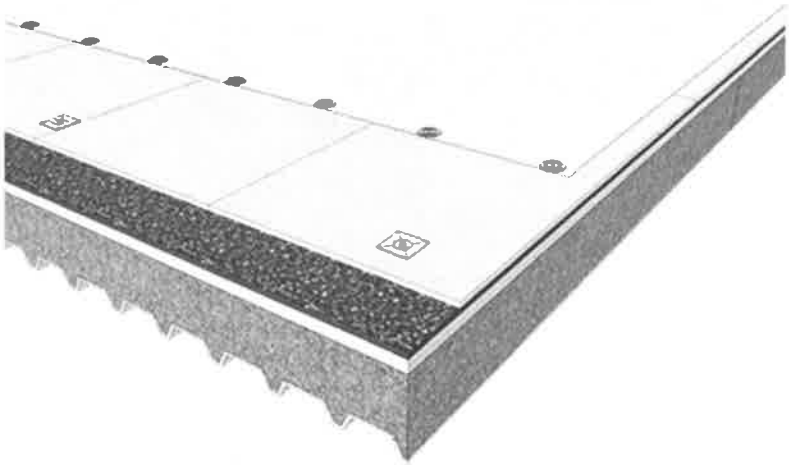

Roof Assembly Description

- **PVC thermoplastic membrane**
  Membrane Thickness: 50 mil
  Color: White
  Attachment: Attached with mechanical fasteners
- **Fan-folded extruded polystyrene (XPS) underlayment**
  Thickness: 3/8 inch
  Attachment: Attached with mechanical fasteners
- **BUR: Granular-Surfaced Cap Sheet**
- **Poured Concrete Roof Deck**

PART 1 GENERAL

1.1 SECTION INCLUDES

A. Overlay BUR: Granular-Surfaced Cap Sheet.

B. PVC thermoplastic membrane attached with mechanical fasteners.

C. Fan-folded extruded polystyrene (XPS) underlayment, attached with mechanical fasteners.

D. Prefabricated flashings, corners, parapets, stacks, vents, and related details.

E. Fasteners, adhesives, and other accessories required for a complete roofing installation.

F. Traffic Protection.

1.2 REFERENCES

A. NRCA - The NRCA Roofing and Waterproofing Manual.

B. ASCE 7 - Minimum Design Loads For Buildings And Other Structures.

C. UL - Roofing Materials and Systems Directory, Roofing Systems (TGFU.R10128).

D. ASTM C 1289 - Standard Specification for Faced Rigid Cellular Polyisocyanurate Thermal Insulation Board.

E. ASTM D 751 - Standard Test Methods for Coated Fabrics.

F. ASTM D 4434 - Standard Specification for Poly (Vinyl Chloride) Sheet Roofing.

G. ASTM E 108 - Standard Test Methods for Fire Tests of Roof Coverings.

H. ASTM E 119 - Standard Test Methods for Fire Tests of Building Construction and Materials.

1.3 SYSTEM DESCRIPTION

A. General: Provide installed roofing membrane and base flashings that remain watertight; do not permit the passage of water; and resist specified uplift pressures, thermally induced movement, and exposure to weather without failure.

B. Material Compatibility: Provide roofing materials that are compatible with one another under conditions of service and application required, as demonstrated by roofing membrane manufacturer based on testing and field experience.

C. Physical Properties:

1. Roof product must meet the requirements of Type III PVC sheet roofing as defined by ASTM D 4434 and must meet or exceed the following physical properties.
2. Thickness: 50 mil, nominal, in accordance with ASTM D 751.
3. Thickness Over Scrim: ≥ 26 mil in accordance with ASTM D 751.
4. Breaking Strengths: ≥ 278 lbf. (MD) and ≥ 423 lbf. (XMD) in accordance with ASTM D 751, Grab Method.
5. Elongation at Break: ≥ 30% (MD) and ≥ 30% (XMD) in accordance with ASTM D 751, Grab Method.
6. Heat Aging in accordance with ASTM D 3045: 176 °F for 56 days. No sign of cracking, chipping or crazing. (In accordance with ASTM D 4434).

7. Factory Seam Strength: ≥ 417 lbf. in accordance with ASTM D 751, Grab Method.
8. Tearing Strength: ≥ 90 lbf. (MD) and ≥ 143 lbf. (XMD) in accordance with ASTM D 751, Procedure B.
9. Low Temperature Bend (Flexibility): Pass at -40 °F in accordance with ASTM D 2136.
10. Accelerated Weathering: No cracking, checking, crazing, erosion or chalking after 5,000 hours in accordance with ASTM G 154.
11. Linear Dimensional Change: < 0.5% in accordance with ASTM D 1204 at 176 ± 2 °F for 6 hours.
12. Water Absorption: < 2.6% in accordance with ASTM D 570 at 158 °F for 166 hours.
13. Static Puncture Resistance: ≥ 33 lbs. in accordance with ASTM D 5602.
14. Dynamic Puncture Resistance: ≥ 14.7 ft-lbf. in accordance with ASTM D 5635.

D. Cool Roof Rating Council (CRRC):

1. Membrane must be listed on CRRC website.
    a. Initial Solar Reflectance: ≥ 85%
    b. Initial Thermal Emittance: ≥ 90%
    c. Initial Solar Reflective Index (SRI): ≥ 107

1.4 SUBMITTALS

A. Submit under provisions of Section 01300.

B. Data sheets on each product to be used, including:

1. Preparation instructions and recommendations.
2. Storage and handling requirements and recommendations.
3. Installation methods.
4. Maintenance requirements.

C. Shop Drawings: Indicate insulation/recover board pattern, overall membrane layout, field seam locations, joint or termination detail conditions, and location of fasteners.

D. Verification Samples: For each product specified, two samples, representing actual product, color, and finish.

1. 4 inch by 6 inch sample of roofing membrane, of color specified.
2. 4 inch by 6 inch sample of walkway pad.
3. Termination bar, fascia bar with cover, drip edge and gravel stop if to be used.
4. Each fastener type to be used for installing membrane, insulation/recover board, termination bar and edge details.

E. Installer Certification: Certification from the roofing system manufacturer that Installer is approved, authorized, or licensed by manufacturer to install roofing system.

F. Manufacturer's warranties.

1.5 QUALITY ASSURANCE

A. Perform work in accordance with manufacturer's installation instructions.

B. Manufacturer Qualifications: A manufacturer specializing in the production of PVC membranes systems and utilizing a Quality Control Manual during the production of the membrane roofing system that has been approved by and is inspected by Underwriters Laboratories.

C. Installer Qualifications: Company specializing in installation of roofing systems similar to those specified in this project and approved by the roofing system manufacturer.

D. Source Limitations: Obtain components for membrane roofing system from roofing membrane manufacturer.

E. There shall be no deviations from the roof membrane manufacturer's specifications or the approved shop drawings without the prior written approval of the manufacturer.

1.6 REGULATORY REQUIREMENTS

A. Conform to applicable code for roof assembly wind uplift and fire hazard requirements.

B. Fire Exposure: Provide membrane roofing materials with the following fire-test-response characteristics. Materials shall be identified with appropriate markings of applicable testing and inspecting agency.

1. Exterior Fire-Test Exposure:

a. Class A; ASTM E 108, for application and roof slopes indicated.

2. Fire-Resistance Ratings: Comply with ASTM E 119 for fire-resistance-rated roof assemblies of which roofing system is a part.

3. Conform to applicable code for roof assembly fire hazard requirements.

C. Wind Uplift:

1. FMG: Provide roofing membrane, base flashings, and component materials that comply with requirements in FMG 4450 and FMG 4470 as part of a roofing system and that is listed on the FMG RoofNav website.

a. Class 1-90.

1.7 PRE-INSTALLATION MEETING

A. Convene meeting not less than one week before starting work of this section.

B. Review methods and procedures related to roof deck construction and roofing system including, but not limited to, the following.

1. Meet with Owner, Architect, Owner's insurer if applicable, testing and inspecting agency representative, roofing installer, roofing system manufacturer's representative, deck installer, and installers whose work interfaces with or affects roofing including installers of roof accessories and roof-mounted equipment.

2. Review and finalize construction schedule and verify availability of materials, installer's personnel, equipment, and facilities needed to make progress and avoid delays.

3. Examine deck substrate conditions and finishes for compliance with requirements, including

flatness and fastening.

4. Review structural loading limitations of roof deck during and after roofing.
5. Review base flashings, special roofing details, roof drainage, roof penetrations, equipment curbs, and condition of other construction that will affect roofing system.
6. Review governing regulations and requirements for insurance and certificates if applicable.
7. Review temporary protection requirements for roofing system during and after installation.
8. Review roof observation and repair procedures after roofing installation.

1.8 DELIVERY, STORAGE AND HANDLING

A. Deliver roofing materials to Project site in original containers with seals unbroken and labeled with manufacturer's name, product brand name and type, date of manufacture, and directions for storing and mixing with other components.

B. Store liquid materials in their original undamaged containers in a clean, dry, protected location and within the temperature range required by roofing system manufacturer. Protect stored liquid material from direct sunlight.

C. Protect roof insulation/recover board materials from physical damage and from deterioration by sunlight, moisture, soiling, and other sources. Store in a dry location. Comply with insulation manufacturer's written instructions for handling, storing, and protecting during installation.

D. Store roof materials and place equipment in a manner to avoid permanent deflection of deck.

E. Store and dispose of solvent-based materials, and materials used with solvent-based materials, in accordance with requirements of local authorities having jurisdiction.

1.9 WARRANTY

A. Contractor's Warranty: The contractor shall warrant the roof application with respect to workmanship and proper application for two (2) years from the effective date of the warranty issued by the manufacturer.

B. Manufacturer's Warranty: Must be no-dollar limit type and provide for completion of repairs, replacement of membrane or total replacement of the roofing system at the then-current material and labor prices throughout the life of the warranty. In addition the warranty must meet the following criteria:

1. Warranty Period: 20 years from date issued by the manufacturer.
2. No exclusion for damage caused by ponding water.
3. No exclusion for damage caused by biological growth.
4. Issued direct from and serviced by the roof membrane manufacturer.
5. Transferable for the full term of the warranty.

PART 2 PRODUCTS

2.1 MANUFACTURER

A. All roofing system components to be provided or approved by roof system manufacturer.

B. Acceptable Manufacturers and Products:

1. Duro-Last, Inc. or Duro-Tuff - 50 mil
2. Sarnafil S327- 60 mil
3. Fibertite SM -60 Mil

2.2 ROOFING SYSTEM COMPONENTS

A. Roofing Membrane: PVC thermoplastic membrane conforming to ASTM D 4434, type III, fabric-reinforced, PVC. Membrane properties as follows:

1. Thickness:
   a. 50 mil.
2. Exposed Face Color:
   a. White.

B. Accessory Materials: Provide accessory materials supplied by or approved for use by roof system manufacturer

1. Sheet Flashing: Manufacturer's standard reinforced PVC sheet flashing.
2. Factory Prefabricated Flashings: manufactured using Manufacturer's standard reinforced PVC membrane.
   a. Stack Flashings.
   b. Curb Flashings.
   c. Inside and Outside Corners.
   d. Drain Boots, Composite Drain Rings (CDR) and Dome Strainers.
   e. Vinyl Coated Metal Scupper Inserts.
   f. Vinyl Coated Pitch Pans.
3. Sealants and Adhesives: Compatible with roofing system and supplied by roof system manufacturer.
   a. Caulk.
   b. Strip Mastic.
   c. Trowelable Mastic.
   d. Pitch Pocket Filler.
4. Slip Sheet: Compatible with roofing system and supplied by roof system manufacturer.
5. Fasteners and Plates: Factory-coated steel fasteners and metal or plastic plates meeting corrosion-resistance provisions in FMG 4470, designed for fastening membrane and insulation/recover board to substrate. Supplied by roof system manufacturer.
   a. Concrete Screws.

b. Concrete Nails.

c. Steel Membrane Plates.

d. 3 inch Metal Plates.

6. Termination and Edge Details: Supplied by roof system manufacturer.

a. Termination Bar.

b. PVC-Clad Sheet Metal Flashing with Factory Attached Membrane Skirt.

c. 2-Piece Edge Metal System.

7. Vinyl Coated Metal: 24 gauge, hot-dipped galvanized, grade 90 metal with a minimum of 17 mil of PVC roofing membrane laminated to one side.

8. Two-Way Roof Vents: Supplied by roof system manufacturer. Install a minimum of 1 vent for each 1,000 ft^2 (93 m^2) of roof area.

C. Underlayment/Recover Board:

a. 3/8 inch thick.

D. Walkways:

1. Provide non-skid, maintenance-free walkway pads in areas of heavy foot traffic and around mechanical equipment.

a. Walkway Pad.

PART 3 EXECUTION

3.1 EXAMINATION

A. Verify that the surfaces and site conditions are ready to receive work.

B. Verify that the deck is supported and secured.

C. Verify that the deck is clean and smooth, free of depressions, waves, or projections, and properly sloped to drains, valleys, eaves, scuppers or gutters.

D. Verify that the deck surfaces are dry and free of standing water, ice or snow.

E. Verify that all roof openings or penetrations through the roof are solidly set.

F. If substrate preparation is the responsibility of another contractor, notify Architect of unsatisfactory preparation before proceeding.

G. Prior to re-covering an existing roofing system, conduct an inspection of the roof system accompanied by a representative of the membrane manufacturer or an authorized contractor.

1. Determine required fastener type, length, and spacing.

2. Verify that moisture content of existing roofing is within acceptable limits.

3. Identify damaged areas requiring repair before installation of new roofing.

4. Conduct core cuts as required to verify information required.

3.2 PREPARATION

A. Clean surfaces thoroughly prior to installation.

B. Prepare surfaces using the methods recommended by the manufacturer for achieving the best result for the substrate under the project conditions.

C. Surfaces shall be clean, smooth, free of fins, sharp edges, loose and foreign material, oil, grease, and bitumen.

INSTALLATION

A. Install insulation/recover board in accordance with the roof manufacturer's requirements.

B. Separation Board: Fan-folded extruded polystyrene (XPS) underlayment.

1. Use only fasteners, stress plates and fastening patterns accepted for use by the roof manufacturer. Fastening patterns must meet applicable design requirements.

   a. Install fasteners in accordance with the roof manufacturer's requirements. Fasteners that are improperly installed must be replaced or corrected.

   b. Attach boards in parallel courses with end joints staggered 50% and adjacent boards butted together with no gaps greater than ¼ inch.

C. Roof Membrane: 50 mil, PVC thermoplastic membrane.

1. Use only fasteners, stress plates and fastening patterns accepted for use by the roof manufacturer. Fastening patterns must meet the applicable design requirements.

2. Install fasteners in accordance with the roof manufacturer's requirements. Fasteners that are improperly installed shall be replaced or corrected.

3. Mechanically fasten membrane to the structural deck utilizing fasteners and fastening patterns that in accordance with the roof manufacturer's requirements.

4. Cut membrane to fit neatly around all penetrations and roof projections.

5. Unroll roofing membrane and positioned with a minimum 6 inch overlap.

6. Fasten 1/2" OSB over the upper roof parapet walls and fully adhere roofing membrane up the wall. Color to be determined by the project manager.

D. Seaming:

1. Weld overlapping sheets together using hot air. Minimum weld width is 1-1/2 inches.

2. Check field welded seams for continuity and integrity and repair all imperfections by the end of each work day.

E. Membrane Termination/Securement: All membrane terminations shall be completed in accordance with the membrane manufacturer's requirements.

1. Provide securement at all membrane terminations at the perimeter of each roof level, roof section, curb flashing, skylight, expansion joint, interior wall, penthouse, and other similar condition.

2. Provide securement at any angle change where the slope or combined slopes exceeds two inches in one horizontal foot.

F. Flashings: Complete all flashings and terminations as indicated on the specifications and drawings and in accordance with the membrane manufacturer's requirements.

1. Provide securement at all membrane terminations at the perimeter of each roof level, roof section, curb flashing, skylight, expansion joint, interior wall, penthouse, and other similar condition.

   a. Do not apply flashing over existing thru-wall flashings or weep holes.

b. Secure flashing on a vertical surface before the seam between the flashing and the main roof sheet is completed.

c. Extend flashing membrane a minimum of 6 inches (152 mm) onto the main roof sheet beyond the mechanical securement.

d. Use care to ensure that the flashing does not bridge locations where there is a change in direction (e.g. where the parapet meets the roof deck).

2. Penetrations:

a. Flash all pipes, supports, soil stacks, cold vents, and other penetrations passing through the roofing membrane as indicated on the Drawings and in accordance with the membrane manufacturer's requirements.

b. Utilize custom prefabricated flashings supplied by the membrane manufacturer.

c. Existing Flashings: Remove when necessary to allow new flashing to terminate directly to the penetration.

d. The owner will have existing roof antennas, equipment and cabling dismantled prior to roof delivery. The contractor will then offload all antennas, equipment, cabling and other debris when they deliver the roofing membrane.

e. Any abandoned units shall be removed and shall be decked over to make the system flush and structurally sound. Abandoned units to be removed shall be identified on the drawings and during the Mandatory Pre-bid meeting.

3. Pipe Clusters and Unusual Shapes:

a. Clusters of pipes or other penetrations which cannot be sealed with prefabricated membrane flashings shall be sealed by surrounding them with a prefabricated vinyl-coated metal pitch pan and sealant supplied by the membrane manufacturer.

b. Vinyl-coated metal pitch pans shall be installed, flashed and filled with sealant in accordance with the membrane manufacturer's requirements.

c. Pitch pans shall not be used where prefabricated or field fabricated flashings are possible.

G. Roof Drains:

1. Coordinate installation of roof drains and vents specified in Section 15146 - Plumbing Specialties.

2. Remove existing flashing and asphalt at existing drains in preparation for sealant and membrane.

3. Provide a smooth clean surface on the mating surface between the clamping ring and the drain base.

4. Provide metal dome strainer over the drain insert.

H. Edge Details:

1. Provide edge details as indicated on the Drawings. Install in accordance with the membrane manufacturer's requirements.

2. Join individual sections in accordance with the membrane manufacturer's requirements.

3. Coordinate installation of metal flashing and counter flashing specified in Section 07620.

4. Manufactured Roof Specialties: Coordinate installation of copings, counter flashing systems, gutters, downspouts, and roof expansion assemblies specified in Section 07710.

5. Where the building buts into the older portion of the courthouse. Contractor will use detail

3140. Then fasten a piece of PVC coated metal to the wall and weld a flashing in over the envelope. Then refasten metal over that. Contractor shall provide shop drawings to clarify flashing installation in this section.

I. Walkways:

1. Install walkways in accordance with the membrane manufacturer's requirements.
2. Provide walkways where indicated on the Drawings.
3. Install walkway pads at roof hatches, access doors, rooftop ladders and all other traffic concentration points regardless of traffic frequency. Provided in areas receiving regular traffic to service rooftop units or where a passageway over the surface is required.
4. Do not install walkways over flashings or field seams until manufacturer's warranty inspection has been completed.

J. Water cut-offs:

1. Provide water cut-offs on a daily basis at the completion of work and at the onset of inclement weather.
2. Provide water cut-offs to ensure that water does not flow beneath the completed sections of the new roofing system.
3. Remove water cut-offs prior to the resumption of work.
4. The integrity of the water cut-off is the sole responsibility of the roofing contractor.
5. Any membrane contaminated by the cut-off material shall be cleaned or removed.

3.3 FIELD QUALITY CONTROL

A. The membrane manufacturer's representative shall provide a comprehensive final inspection after completion of the roof system. All application errors shall be addressed and final punch list completed.

3.4 PROTECTION

A. Protect installed roofing products from construction operations until completion of project.

B. Where traffic is anticipated over completed roofing membrane, protect from damage using durable materials that are compatible with membrane.

C. Repair or replace damaged products after work is completed.

END OF SECTION

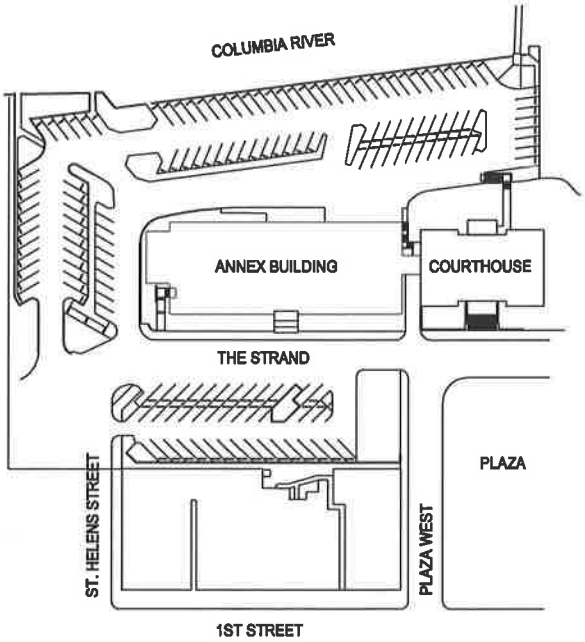

SITE PLAN
SCALE: NTS

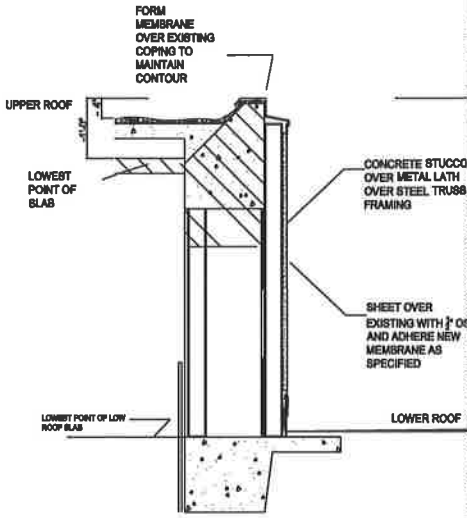

PARAPET WALL DETAIL
SCALE: NTS

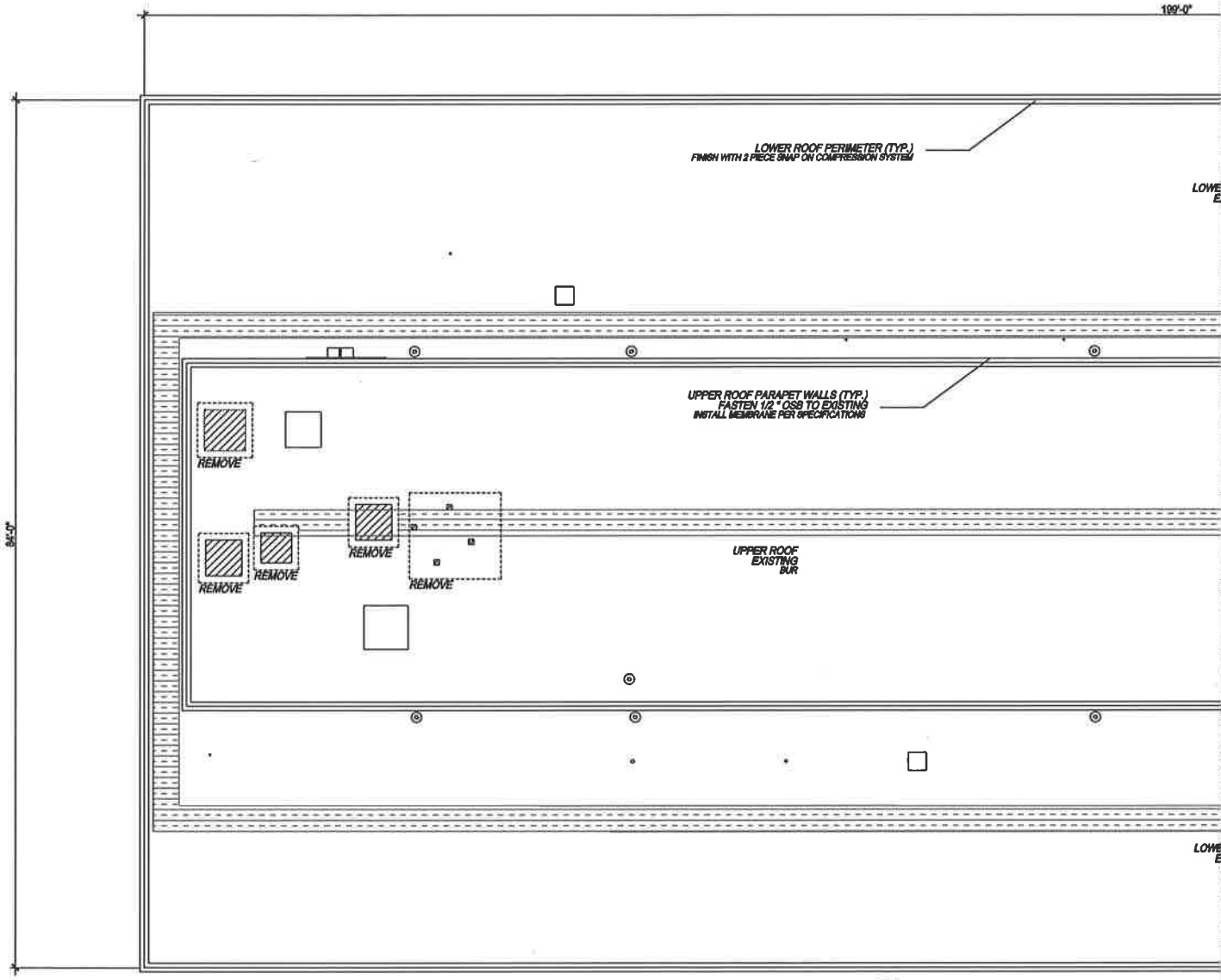

3. ANNEX ROOF AS-BUILT
SCALE: 1/16" = 1'-0"

N

DETAIL 3140

DURO–LAST, INC.
525 Morley Drive
Saginaw, MI 48601

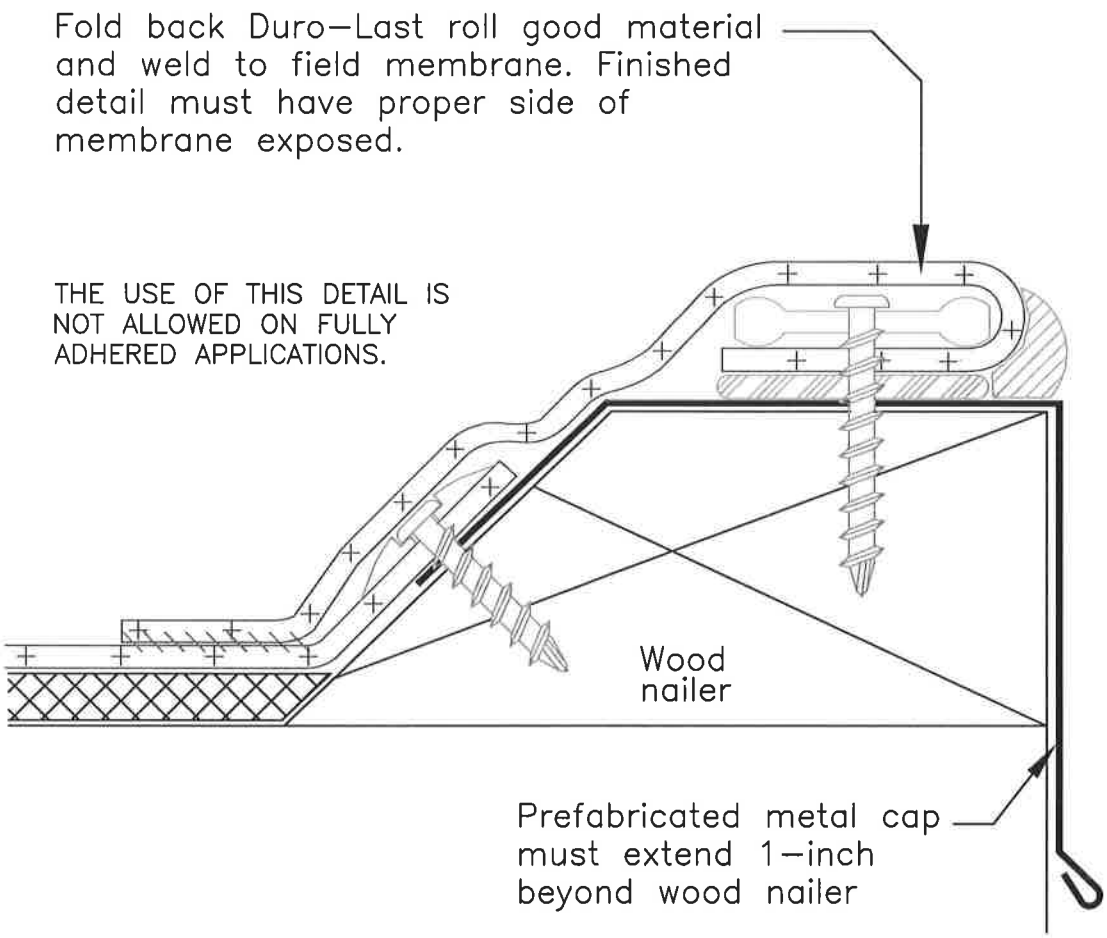

Note 1: Duro–Last termination bar to be installed at the outer edge of the metal cap. Install termination bar first. Fold back the membrane and weld it onto field membrane. Finished detail must have proper side of membrane exposed (roll goods).

Note 2: An overlap of 1½–inches will be required between sections of metal cap. A bead of caulk is required in each overlap.

DATE: JANUARY 2009	EDGE DETAIL
DRAWN BY: ENG. DEPT.	ENVELOPED TERMINATION BAR ON CANT
SCALE: NONE	NEW CONSTRUCTION OR RE-ROOF

© COPYRIGHT 2009

DURO-LAST, INC.
525 Morley Drive
Saginaw, MI 48601

DETAIL 2021

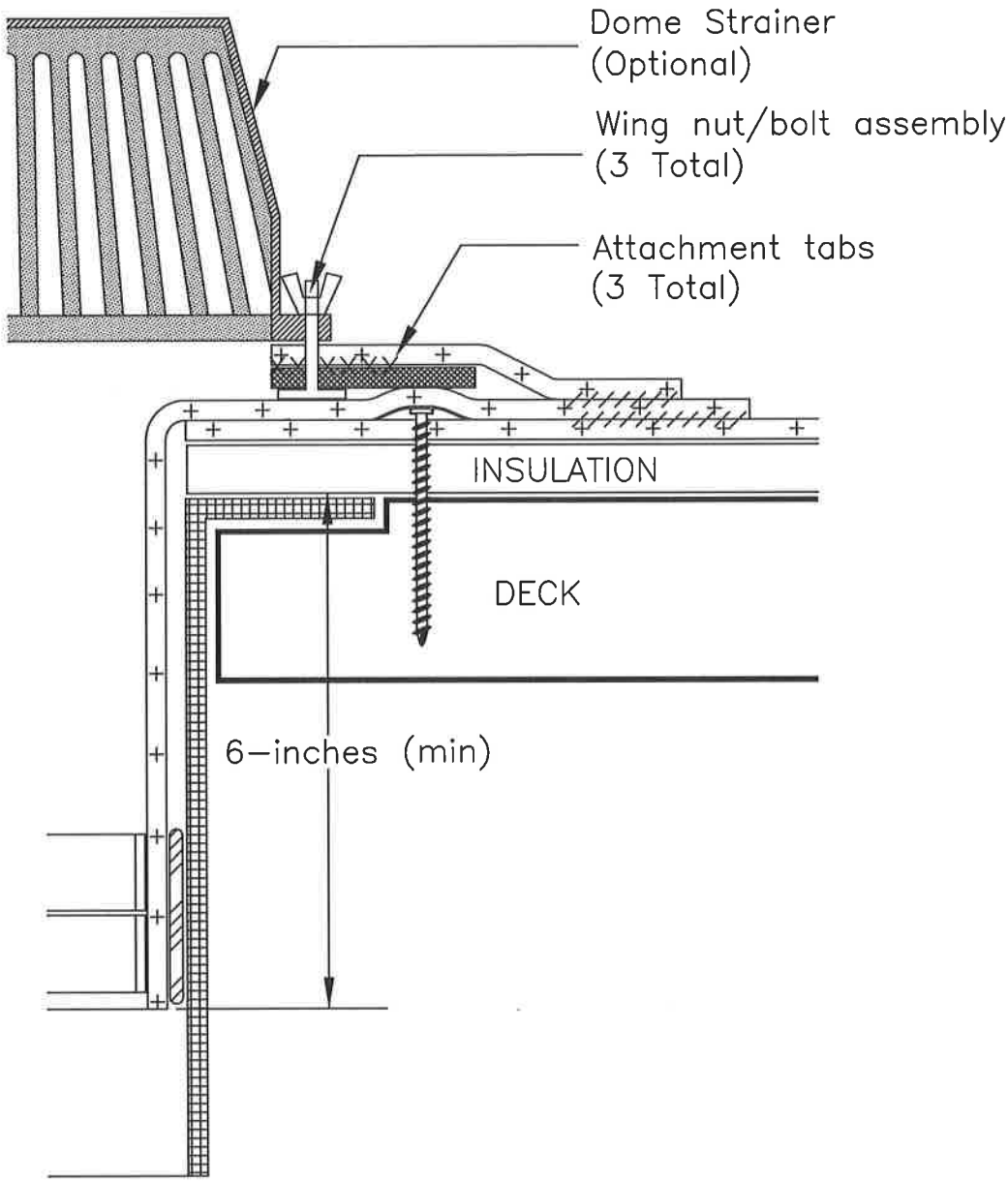

Note 1: Dome Strainer attachment tabs are secured to the roof membrane by heat welding.

Note 2: See Detail 2020 for drain installation instructions.

Note 3: Dome Strainers shall be used with roof drains 6–inches in diameter or less, but should never be used on any drain pipe greater than 6–inches in diameter.

DATE: JANUARY 2009	DRAINAGE DETAILS
DRAWN BY: ENG. DEPT.	ROOF DRAIN DOME STRAINER
SCALE: NONE	NEW CONSTRUCTION OR RE-ROOF

© COPYRIGHT 2009

DETAIL 5020

DURO–LAST, INC.
525 Morley Drive
Saginaw, MI 48601

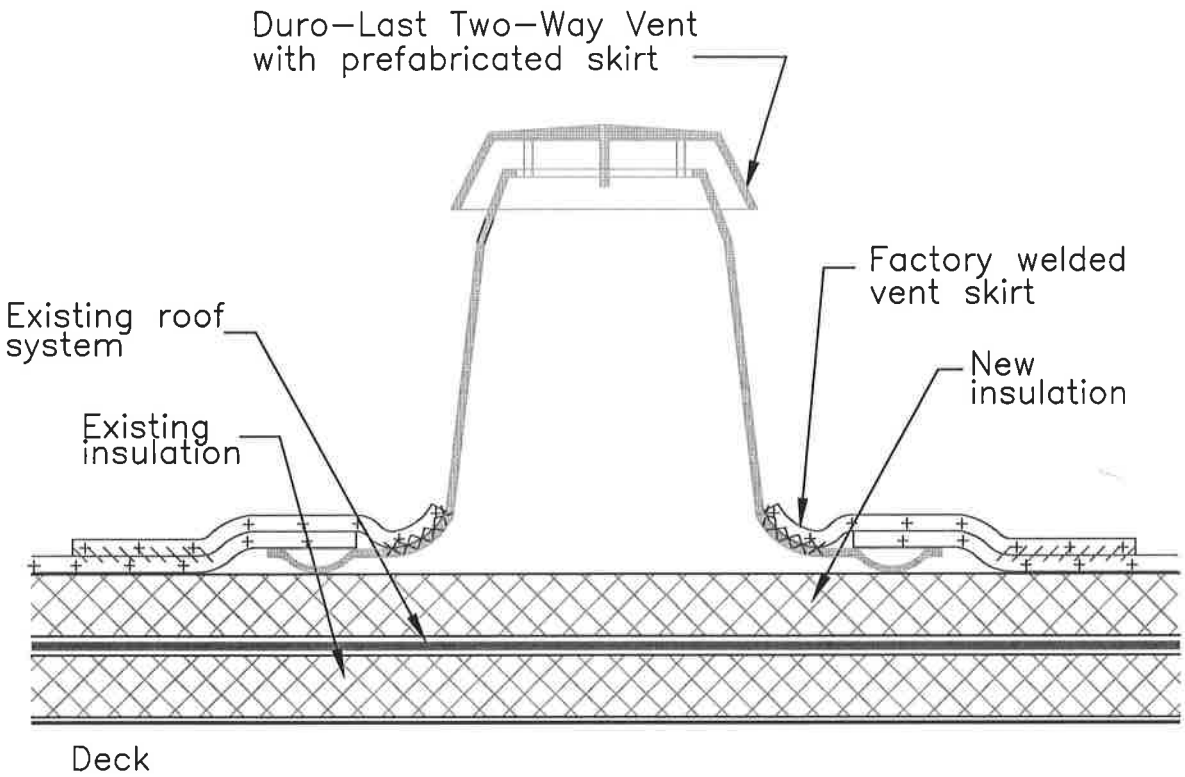

Note 1: Install one vent for every 1,000 square feet or portion of 1,000 square feet of roof area. Vents shall be evenly spaced between rows of fastening tabs across the roof. A minimum of 1 vent per roof area is required.

Note 2: Cut a 7–inch hole through the Duro–Last membrane for vent installation and install the feet of the vent under the membrane. Do not fasten the vent to the deck.

Note 3: Duro–Last 2–way air vents are not required on coolers or freezers, or open structures such as carports.

DATE: JANUARY 2009	TWO-WAY VENT DETAIL
DRAWN BY: ENG. DEPT.	TWO-WAY BREATHER VENT
SCALE: NONE	NEW CONSTRUCTION OR RE-ROOF

© COPYRIGHT 2009

DETAIL FA6010

DURO-LAST, INC.
525 Morley Drive
Saginaw, MI 48601

Adhered Wall Flashing Options

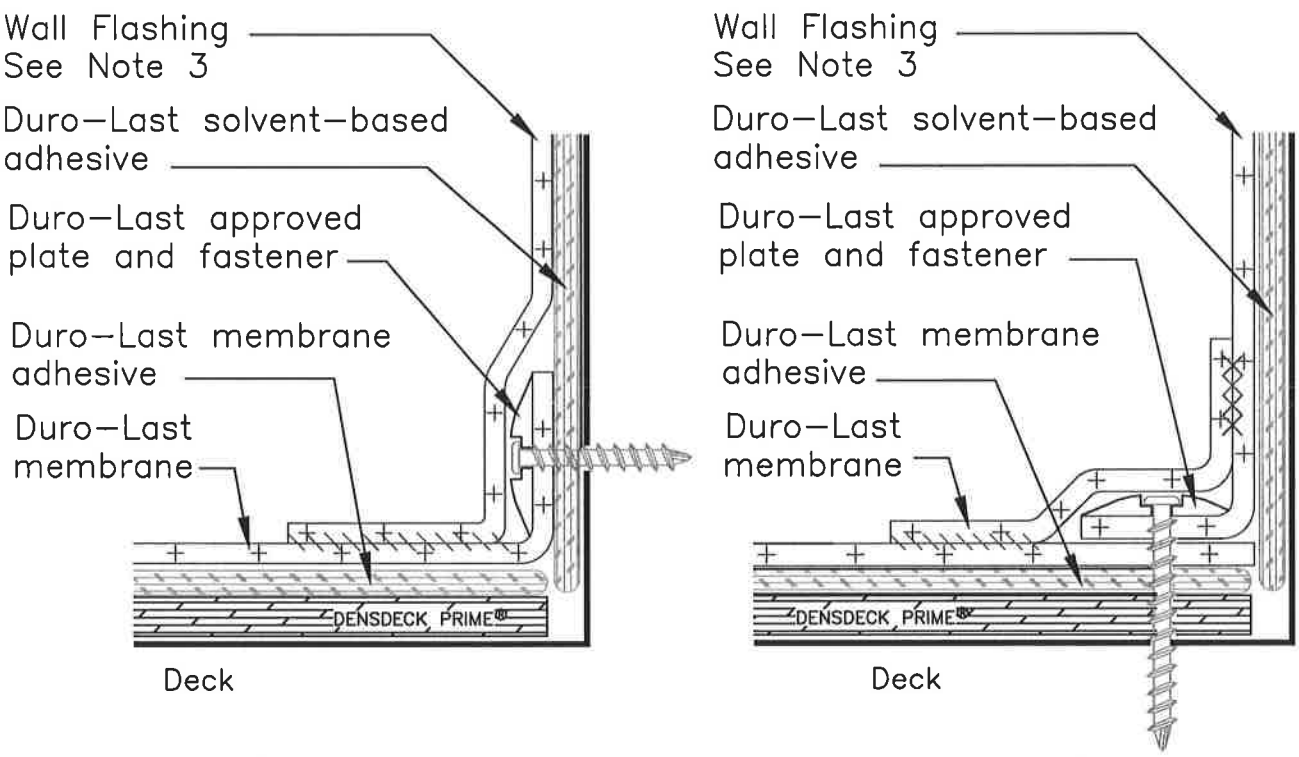

Option 1 Option 2

Note 1: Use one of these options for fastening the roof system at the roof–to–wall transition when the wall flashing is adhered.

Note 2: When wall flashing is mechanically attached, see detail FA6000.

Note 3: Minimum termination height for wall flashing is 8–inches above the finished deck.

Note 4: Rows of mechanical fasteners are required at 5–foot intervals when the wall flashing will extend up the wall 5–feet or higher.

Note 5: DensDeck® Prime is the recommended substrate board. For additional substrate options see Section 2 of the Adhered Specification or contact the Duro–Last Engineering Services Department.

DATE: JANUARY 2009	FULLY-ADHERED SYSTEM
DRAWN BY: ENG. DEPT.	PARAPET WALL FLASHING
SCALE: NONE	NEW CONSTRUCTION OR RE-ROOF

© COPYRIGHT 2009

CLEAT PLATE™

DATA SHEET

Description:
The Cleat Plate™ is a 0.035 inch (0.9 mm) thick, 2-3/8 inch (60.3 mm) diameter galvalume plate. The Galvalume finish has proven weatherability and resiliency. Cleat Plates are packaged and sold in quantities of 1000.

Cleat Plates are stamped to include a recessed 0.265 inch (6.7 mm) diameter hole in the center and a series of ribs for added strength. The configuration of the ribs and the hole is used to prevent the screw head from coming in contact with the Duro-Last® roofing membrane.

In addition to the stamped ribs, there are "cleats" stamped into the plate to hold the Duro-Last roofing membrane in place without tearing or puncturing the membrane in high-stress load applications. Also, because the cleats are not sharp, they are easier to handle.

The Cleat Plate is a long-lasting and durable plate that is available from Duro-Last, Inc.

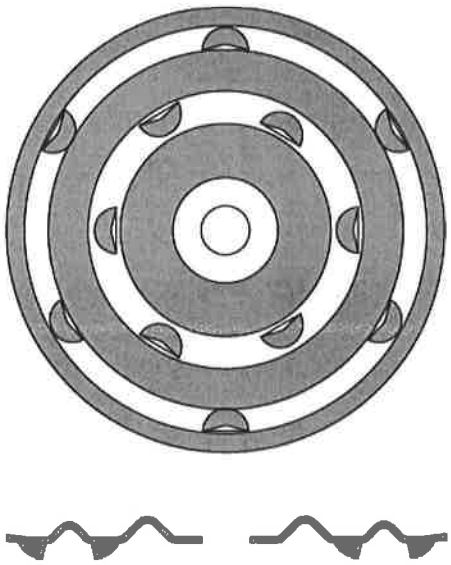

Installation:
The Cleat Plate must be used for securing the Duro-Last membrane to the deck along the prefabricated fastening tabs and the edges of the sheet parallel to the tab direction. The Cleat Plate is installed with the "Cleats" towards the membrane. The Cleat Plate must be installed with the edge flush to the edge of the fastening tab. (Note: when used with the Duro-Roof® System, the plate must be installed along the center of the 6 inch (152 mm) fastening tab.)

Duro-Last: The Proven Performer®

"Duro-Last" and "The World's Best Roof" are registered marks owned by Duro-Last , Inc. 2009

DURO-LAST® CONCRETE SCREW

DATA SHEET

Description:
Duro-Last®, Inc. specifies the use of concrete screws for the mechanical fastening of the Duro-Last roofing system on structural concrete decks. Duro-Last Concrete Screws are equipped with #3 square drive truss heads and are Duro-Coated for protection against the harsh roofing environment.

Duro-Last Concrete screws surpass the FM 4470 specification and may be used to fasten both insulation and the Duro-Last membrane to the deck.

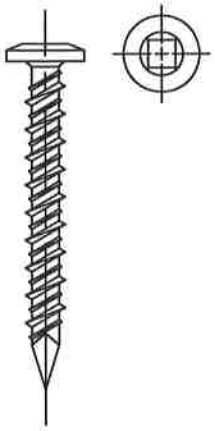

Installation:
1. Duro-Last Concrete screws are designed to be installed into a pilot hole made by a 3/16-inch (5 mm) masonry drill bit.
2. The depth of the pilot hole should be a minimum of 1.5 inch (38 mm).
3. Penetration into the concrete deck is 1 inch (25.4 mm), minimum, from the top surface of the deck.
4. A Duro-Last Plate is required for each fastener used for membrane attachment.

Note:
- Duro-Last, Inc. stocks concrete screws in the sizes noted in the table to the right. Additional sizes are available on a drop ship basis. Please allow adequate time for ordering and delivery of special orders.

CONCRETE SCREW DIMENSIONS	
Length	Quantity per Bucket
1.25 in. (31 mm)	1000
1.75 in. (44 mm)	1000
2.25 in. (57 mm)	1000
2.75 in. (69 mm)	1000
3.25 in. (82 mm)	1000
3.75 in. (95 mm)	1000
4.25 in. (107 mm)	1000
5 in. (127 mm)	1000
5.5 in. (139 mm)	1000
6 in. (152 mm)	1000
6.5 in. (165 mm)	500
7 in. (178 mm)	500
7.5 in. (190 mm)	500
8 in. (203 mm)	500
9 in. (229 mm)	500
10 in. (254 mm)	500
11 in. (279 mm)	500
12 in. (305 mm)	500

Duro-Last: The Proven Performer®

"Duro-Last" and "The World's Best Roof" are registered marks owned by Duro-Last , Inc. 2009

DURO-LAST® CONCRETE NAIL

DATA SHEET

Description:
Duro-Last®, Inc. specifies the use of concrete nails for the mechanical fastening of the Duro-Last roofing system on structural concrete decks. Duro-Last Concrete Nails are Duro-Coated for protection against the harsh roofing environment.

The concrete nails surpass the FM 4470 specification and may be used to fasten both insulation and the Duro-Last membrane to the deck.

Installation:
1. Duro-Last Concrete Nails are designed to be installed into a pilot hole made by a 3/16-inch (5 mm) masonry drill bit.
2. The depth of the pilot hole should be a minimum of 1.5 inch (38 mm).
3. Penetration into the concrete deck is 1 inch (25.4 mm), minimum, from the top surface of the deck.
4. A Duro-Last Plate is required for each fastener used for membrane attachment.

Note:
- Duro-Last, Inc. stocks concrete nails in the sizes noted in the table to the right. Additional sizes are available on a drop ship basis. Please allow adequate time for ordering and delivery of special orders.

CONCRETE NAIL DIMENSIONS	
Length	Quantity per Bucket
1.5 inch (38 mm)	500
2 inch (51 mm)	500
2.5 inch (64 mm)	500
3 inch (76 mm)	500
3.5 inch (89 mm)	500
4 inch (102 mm)	500
4.5 inch (114 mm)	500
5 inch (127 mm)	500
5.5 inch (140 mm)	500
6 inch (152 mm)	500
7 inch (178 mm)	500
8 inch (203 mm)	500
9 inch (229 mm)	500
10 inch (254 mm)	250
11 inch (279 mm)	250
12 inch (305 mm)	250

"Duro-Last" and "The World's Best Roof" are registered marks owned by Duro-Last , Inc. 2009

DURO-LAST® CURB FLASHINGS

DATA SHEET

Description:
Duro-Last® Curb Flashings are designed to be used on rectangular penetrations encountered on a roofing project. The curb flashings are made with Duro-Last specially formulated roofing membrane. The combination of reinforced membrane and prefabrication ensures a long lasting, watertight flashing. They are available in white, tan, gray and dark gray colors as well as in the Designer Series membranes (slate gray Shingle-Ply, sandstone Shingle-Ply and Rock Ply).

Curb flashings are easily heat welded (hot-air) to the Duro-Last membrane over which the flashings are installed. Hot-air seaming eliminates the need for chemicals, torches and other unsafe, non-manageable seaming systems. Duro-Last Curb Flashings are prefabricated using Duro-Last's outside corners to eliminate field welds in the critical corner areas. Curb flashings are ordered to the dimensions of individual penetrations. The table below show the minimum sizes available.

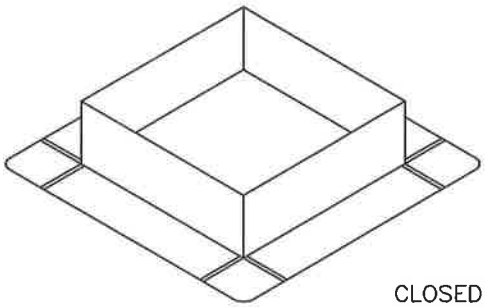

CLOSED

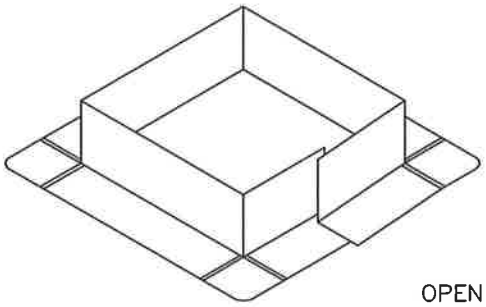

OPEN

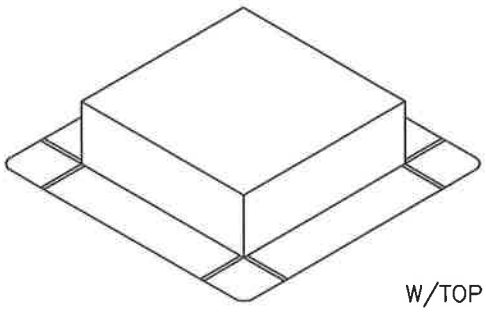

W/TOP

Installation:
1. The roof membrane installed around the penetration must be fastened prior to installing the curb flashing. Use the same fastener spacing that was used to install the roof membrane but do not exceed 18 in. (457 mm) on center. At least one fastener must be installed on each side of the penetration. On reroofing applications, remove the existing flashings to ensure a watertight fit.
2. It is not necessary to place fasteners at the corners.
3. The flashing must extend a minimum of 8 in. (203 mm) in vertical height (Note: a curb flashing with top does not have a minimum height requirement.)
4. The curb flashing may be terminated with termination bar or extended onto the inside of the curb. (See details 4010 & 4020). (Note: A curb flashing with top does not require termination.)

Note:
- An "open" curb flashing requires a heat weld (hot-air) to close the flashing. The extra material necessary for this weld is included as part of the flashing.
- A curb flashing for a canted curb should be ordered using the dimensions above the cant. A curb flashing with a 12 in. (305 mm) wide skirt will provide additional membrane to cover the cant.
- A curb flashing with a top can be no greater than 60 in. (1525 mm) in width and can only be ordered closed.
- Add 1/4 in. (6.3 mm) to width and length dimensions for a better fitting curb flashing.
- Call Duro-Last for assistance in ordering curb flashings that need to be designed for special situations.

MINIMUM CURB SIZES AVAILABLE

	Width (A)	Length (B)	Height (C)	Skirt
Open	2 in. (51 mm)	2 in. (51 mm)	8 in. (203 mm)	6 in. (152 mm)
Closed	2 in. (51 mm)	2.5 in. (63.6 mm)	8 in. (203 mm)	6 in. (152 mm)
w/Top	3.5 in. (89 mm)	3.5 in. (89 mm)	3 in. (76 mm)	6 in. (152 mm)

Duro-Last: The Proven Performer®

"Duro-Last" and "The World's Best Roof" are registered marks owned by Duro-Last , Inc. 2009

DURO-LAST® THE WORLD'S BEST ROOF®

PRODUCT DATA SHEET

DURO-GUARD® XPS FAN FOLD – A (HYBRID CRUSH/CUT FOLD)

Description:

Duro-Guard® XPS Fan Fold – A is manufactured with a rigid extruded polystyrene (XPS) core and wrapped with tough facers which create a durable water resistant board. XPS is highly resistant to heat flow and moisture penetration. The film facers are compatible with all roof membranes offered by Duro-Last, Inc.

- Use as a recover board over:
  - Granulated or smooth cap sheets.
  - Smooth built-up roof systems.
  - Aggregate surfaced built-up roofs (3/8 inch aggregate, max.).
  - Aged coal tar pitch roof systems.
  - Single-ply membranes.
- Inert, non-nutritive, and highly stable.
- Contains no CFCs, HCFCs, formaldehyde or VOC ozone depleting gases.
- Superior moisture resistance.
- Refer to Table 1 for physical properties.

Uses:

- Mechanically attached roof systems.

Underwriters Laboratories Inc.:

- Refer to Duro-Last's UL Listings (TGFU.R10128) for fire-rated assembly details (www.ul.com).

Figure 1. Duro-Guard XPS Fan Fold – A

TABLE 1. TYPICAL PHYSICAL PROPERTIES		
Property	Test Method	Result
Thermal Resistance, R-Value	ASTM C 518 @75°F	1.5 °F·ft²·hr/Btu
Compressive Strength (Min. psi @ 10% deflection)	ASTM D 1621	15 psi
Water Vapor Permeance	ASTM E 96 (Dessicant Method)	0.06 perm
Water Absorption (Max. % by Volume)	ASTM C 272	0.6%
Fire Characteristics Flame Spread Smoke Developed	ASTM E 84	 10 200

Board Dimensions:

- 3/8 inch thick.
- 4 ft x 50 ft.
- 200 square-foot coverage.
- Fan-folded every 2 ft creating easy to handle bundles measuring 2 ft x 4 ft x 9 inches thick.

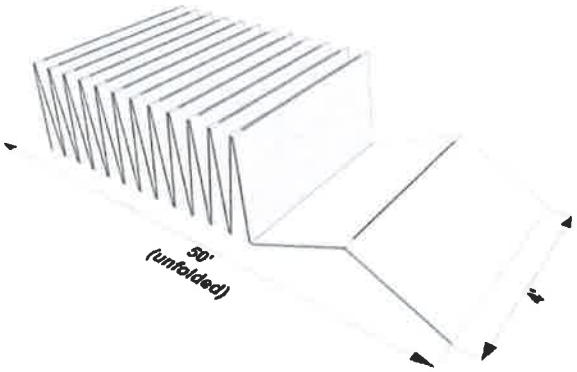

Figure 2. Duro-Guard XPS Fan Fold – A Dimensions

Duro-Last, "World's Best Roof" and Duro-Guard are registered marks owned by Duro-Last, Inc.
Updated: 12/4/2013

Installation:

- **Duro-Guard XPS Fan Fold – A may be used directly under the Duro-Last membrane. Ensure that "bare" XPS is never in direct contact with the Duro-Last membrane. Refer to the appropriate Duro-Last specification for slip sheet and cover board requirements.**
- Panels must be kept dry before, during and after installation. Install only as much fan fold board as can be covered the same day with completed roofing.
- Abut panel edges together and stagger joints of adjacent panels.
- Boards must be neatly fitted to roof deck and around penetrations with no gaps greater than ¼ inch.
- Refer to the appropriate Duro-Last roof system specification and detail drawings for deck preparation and other requirements.
- Precautions must be taken to ensure that new concrete decks have fully cured and do not continue to release moisture.

Fan Fold Attachment:

Mechanical Attachment

- Refer to Duro-Last Mechanically Attached System Specifications and Detail Drawing #1030 for approved fasteners and fastening patterns.
- Use fasteners and plates supplied by, or approved by, Duro-Last, Inc.

Storage:

- Fan fold board must be protected from open flame and kept dry at all times.
- Factory applied packaging is intended only for protection during transit. Slit or remove the packaging to prevent accumulation of condensation.
- Store elevated (at least 3") and completely covered with a weatherproof covering such as a tarpaulin.
- Do not use panels which are wet or damaged.

Limitations:

- Duro-Last, Inc. will not be responsible or liable for any defects or problems related to building or roof design by others, to deficiencies in construction, to dangerous conditions on the job site, or to improper storage, handling or installation by others.

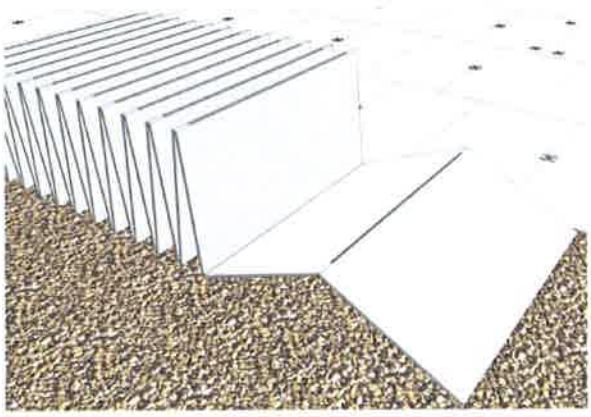

Figure 3. Duro-Guard XPS Fan Fold – A as a recover board

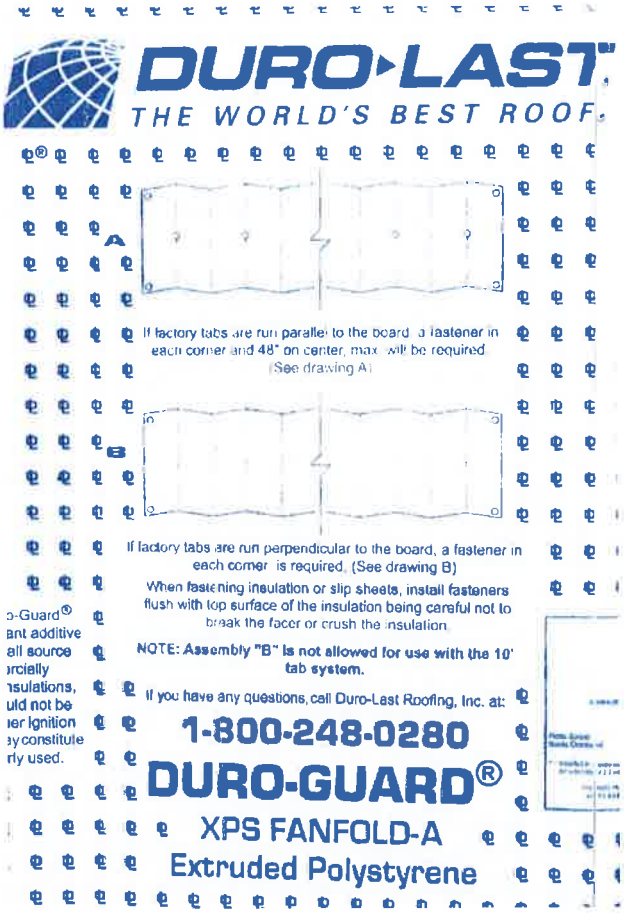

Figure 4. Partial view of facer on top surface

Duro-Last, "World's Best Roof" and Duro-Guard are registered marks owned by Duro-Last, Inc.
Updated: 12/4/2013

DURO-LAST® DRAIN BOOT

DATA SHEET

Description:
Duro-Last® prefabricated Drain Boots can be used in most circular roof drains and are especially useful in reroofing applications. They are fabricated from Duro-Last's specially formulated roofing membrane. The combination of reinforced membrane and prefabrication ensures a long lasting, watertight flashing.

The sleeve of the drain boot is a different color than the base to differentiate it from Duro-Last Stack Flashings. The base is available in white, tan, gray, dark gray and terra cotta as well as in the Designer Series membranes (slate gray Shingle-Ply™, sandstone Shingle-Ply™ and Rock-Ply™) and are usually ordered to match the roof membrane.

Drain boots are prefabricated 12 inches (305 mm) in depth. Special orders are available upon request.

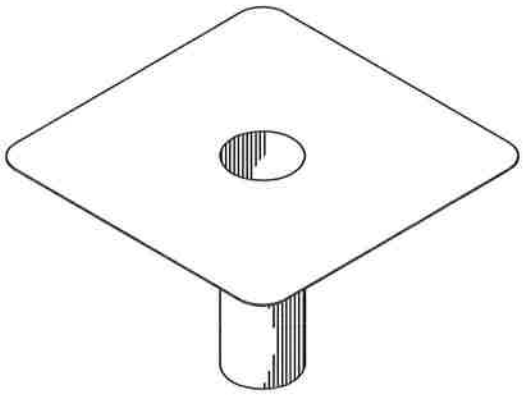

Drain Boot
(Install per detail drawing 2020)

Installation:
1. The roof membrane installed around the drain must be fastened prior to installing the drain boot flashing. Use the same fastener spacing that was used to install the roof membrane but do not exceed 18 inches (457 mm) on center. A minimum of one fastener must be installed.
2. Apply Duro-Caulk® Plus to the outside of the drain boot before it is inserted into the drain pipe.
3. Once inserted, the drain boot shall be heat welded (hot-air) to the field membrane.
4. A pair of expandable composite drain rings (CDR) should then be installed as low into the drain boot as possible, with a minimum depth of 6 inches (152 mm).
5. Sealant and CDRs must be installed at the same depth in the drain.
6. Refer to detail 2020 for installation information.

DRAIN BOOT DIMENSIONS [All sizes have 24 x 24 in. (610 x 610 mm) base]	
DRAIN DIAMETER	SLEEVE DIAMETER
2 in. (51 mm)	1.875 in. (48 mm)
3 in. (76 mm)	2.875 in. (73 mm)
3.5 in. (89 mm)	3.25 in. (83 mm)
4 in. (102 mm)	3.875 in. (98 mm)
4.5 in. (114 mm)	4.25 in. (108 mm)
5 in. (127 mm)	4.875 in. (149 mm)
5.5 in. (140 mm)	5.25 in. (133 mm)
6 in. (152 mm)	5.875 in. (149 mm)
6.5 in. (165 mm)	6.25 in. (159 mm)
7 in. (178 mm)	6.875 in. (175 mm)
7.5 in. (191 mm)	7.25 in. (184 mm)
8 in. (203 mm)	7.875 in. (200 mm)

"Duro-Last" and "The World's Best Roof" are registered marks owned by Duro-Last , Inc.

DURO-LAST
THE WORLD'S BEST ROOF®

PRODUCT DATA SHEET

DURO-CAULK® PLUS

DESCRIPTION:

Duro-Caulk® Plus is a one-component, non-sag, elastomeric, neutral-cure silicone sealant. It is available in white, gray, tan and bronze colors. Duro-Caulk Plus is formulated for use with all Duro-Last® roofing system details that require sealant.

Duro-Caulk Plus is unaffected by most atmospheric conditions and will typically cure within 48 hours. It is formulated to bond to substrates such as PVC, glass, aluminum, steel, plastic, ceramics, concretes, and wood. Its high-tack properties ensure a weather-tight seal around penetrations, terminations and drain inserts.

ORDERING:

Duro-Caulk Plus is supplied in 10.1-ounce cartridges and can be ordered individually or in cases of 30. One cartridge will cover approximately 18 to 20 linear feet.

STORAGE AND HANDLING

1. Duro-Caulk Plus has a 12-month shelf life from the date of manufacture printed on the cartridge.

PRECAUTIONS:

1. Read Safety Data Sheets (SDS) prior to using.
2. Wear proper personal protective equipment, such as gloves and eye protection, per the SDS.
3. **Keep away from children.**

INSTALLATION:

1. Limitations
   a. Apply to clean, dry surfaces free of contaminants (oils, greases, coatings, etc.) that can adversely affect adhesion.
   b. Do not apply to surfaces that bleed oils or solvents.
   c. Product is not paintable.
2. Apply using a standard caulking gun. Do not open the cartridge until you are ready to apply the sealant.
3. Apply the sealant using consistent, positive pressure to force sealant into the joint, creating a bead approximately 3/8 inch (0.37 mm) in diameter.
4. Tool the sealant to create a concave joint shape to shed water and ensure maximum adhesion and coverage. Dry tooling is recommended. DO NOT use soapy water or other liquids when tooling.
5. Sealant may be applied below freezing temperatures.
6. Product will skin over within 20 minutes of application. The time may vary depending on humidity and temperature at the time of application.

STANDARDS:

This product conforms with the following requirements and standards: ASTM C-920, Type S, Grade NS, Class 25, Use NT, T, M, G, A, O: TT-2-00230C, Type II, Class A; TT-S-001543A, Class A; CAN-19.13-M87, AAMA 802.3 Type I & II, AAMA 803.3 Type I,AAMA 805.2, AAMA 808.3 and California Air Resources Board 2003 requirements for Volatile Organic Compound content.

DURO-CAULK PLUS PROPERTIES		
Sag resistance	Non-sagging	ASTM D2202
Bond durability to glass, aluminum and concrete	±25%	ASTM C793
Movement capability	±25%	ASTM C719
Tensile strength	300 psi	ASTM D412
Elongation at break	325	ASTM D412
Hardness, Shore A	35 ±5	ASTM C661
Accelerated weathering	No change	QUV Weatherometer
Tack-free time	10 minutes	ASTM C679

Duro-Last, Duro-Caulk and "World's Best Roof" are registered marks owned by Duro-Last, Inc.
Created: 01/01/2009 Revised: 07/16/2014

DURO-LAST® DURO-FLASH II™

DATA SHEET

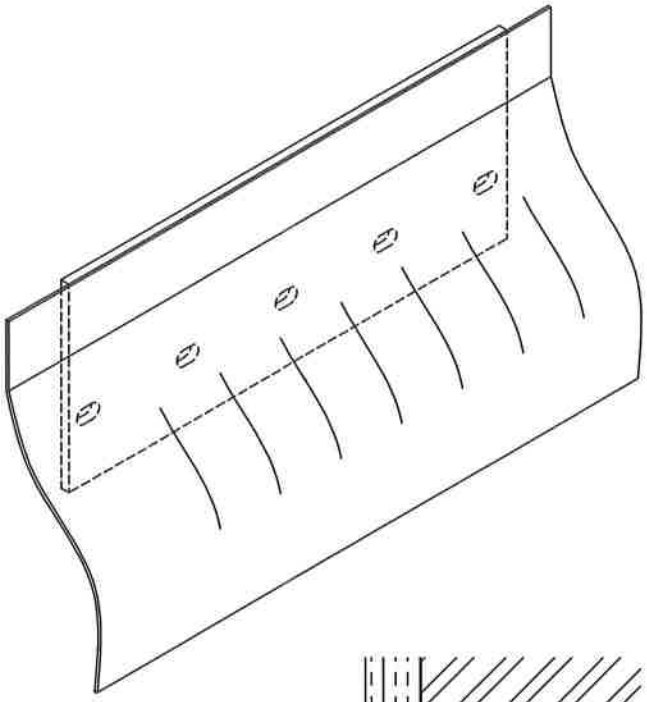

Description:
Duro-Last® Duro-Flash II may be used as a termination under existing metal counterflashing. It is fabricated from 3 inch wide vinyl coated metal and a 12 inch (152 mm) wide skirt. The skirt is made of Duro-Last specially formulated roofing membrane, which is a proprietary thermoplastic formulation, available in white, tan, gray and dark gray colors.

Duro-Flash II is available in 10 ft. (3 m) lengths. The skirt extends past the vinyl coated metal 3 inches (76 mm) on each end to allow adjacent sections to be heat welded (hot-air) together.

Installation:
1. Duro-Flash II shall be slid under the existing metal counterflashing 1 inch (25 mm), minimum (this is the width of the factory weld).
2. The skirt shall be held up to allow Duro-Last fasteners to be placed 6 inches (152 mm) on center, maximum, through the metal into the wall substrate.
3. Heat weld (hot-air) the skirt to the Duro-Last membrane already installed below the metal.
4. Refer to detail drawing #6142.

Notes:
- Duro-Flash II is ordered in 10 ft. (3 m) lengths and packaged in cardboard boxes.

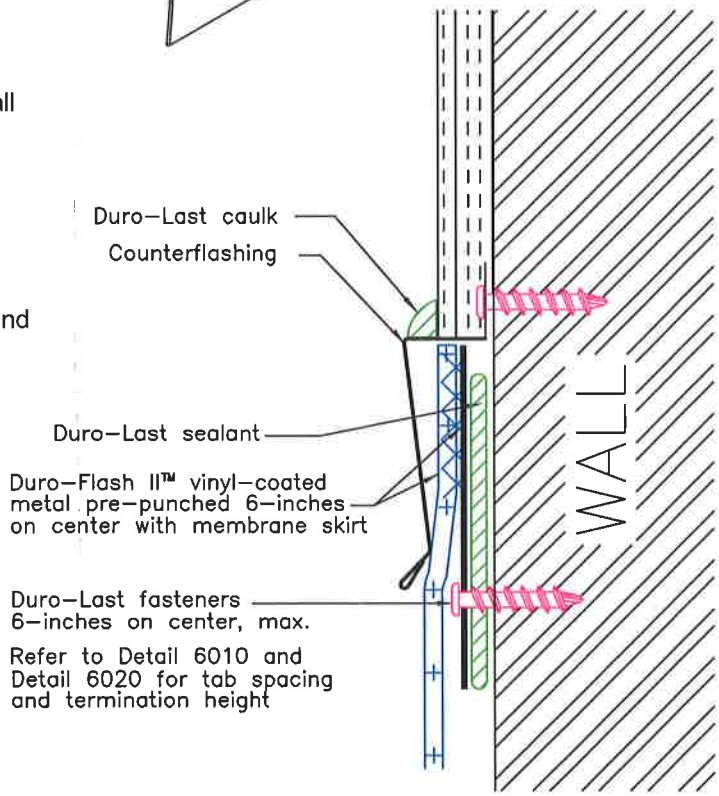

Refer to detail #6142 for Installation Information

Duro-Last: The Proven Performer®

"Duro-Last" and "The World's Best Roof" are registered marks owned by Duro-Last , Inc. 2009

DURO-LAST® INSIDE AND OUTSIDE CORNERS

DATA SHEET

Description:
Duro-Last® Inside and Outside Corners are to be used in corner areas encountered on a roofing project. The corners are made with Duro-Last specially formulated roofing membrane. The combination of reinforced membrane and prefabrication ensures a long lasting, watertight flashing.

Inside and outside corners are available in white, tan, gray and dark gray colors as well as in the Designer Series membranes (slate gray Shingle-Ply, sandstone Shingle-Ply and Rock Ply). They can be ordered in 6 x 6 in. (152 x 152 mm) or 6 x 18 in. (152 x 457 mm) sizes.

Installation:
1. Prefabricated inside and outside corners shall be heat welded (hot-air) to the field membrane and/or parapet flashings.
2. The use of outside corners is required but the use of inside corners is optional depending on the configuration of the flashing membrane.
3. Refer to detail 1180 for additional information.

NOTE:
- Inside and outside corners are manufactured from Duro-Last membrane and shall be furnished by Duro-Last Roofing, Inc.
- Outside corners must be manufactured by Duro-Last.
- Inside corners may be fabricated in the field or purchased from Duro-Last Roofing, Inc.
- Butterfly corners are also available for use as shown in the drawing on the right.

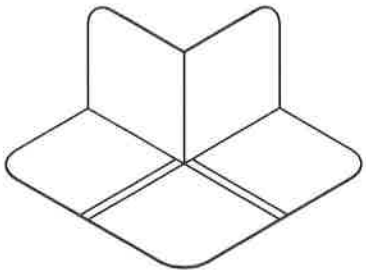

OUTSIDE CORNER

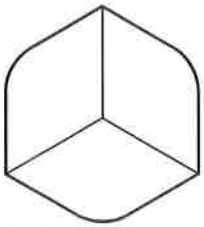

INSIDE CORNER

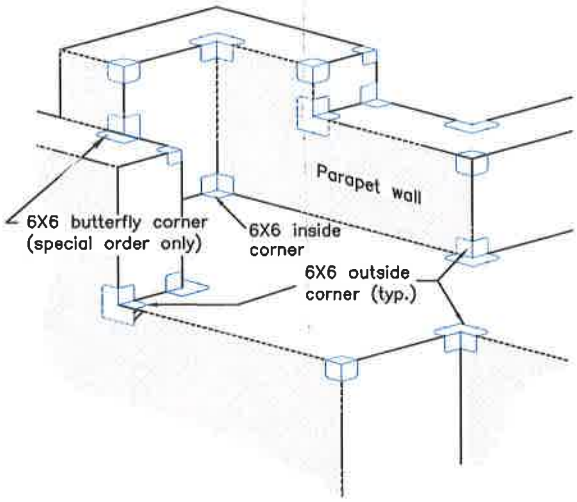

LOCATIONS TO USE CORNERS

"Duro-Last" and "The World's Best Roof" are registered marks owned by Duro-Last , Inc. 2009

DURO-LAST® 3-INCH METAL PLATE

DATA SHEET

Description:
The Duro-Last® Metal Plate is 0.024-inch (0.6 mm) thick, 3 x 3 inch (76 x 76 mm) square galvalume plate. Galvalume has proven weatherability and resiliency. The Duro-Last Metal Plates are packaged and sold in quantities of 500.

Duro-Last Metal Plates are stamped to include a recessed ¼ inch (6.4 mm) diameter hole in the center and a series of ribs for added strength. The configuration of the ribs and the hole is used to prevent the screw head from coming in contact with the Duro-Last roofing membrane. The Duro-Last Metal Plate is a long-lasting and durable plate that is available only from Duro-Last, Inc.

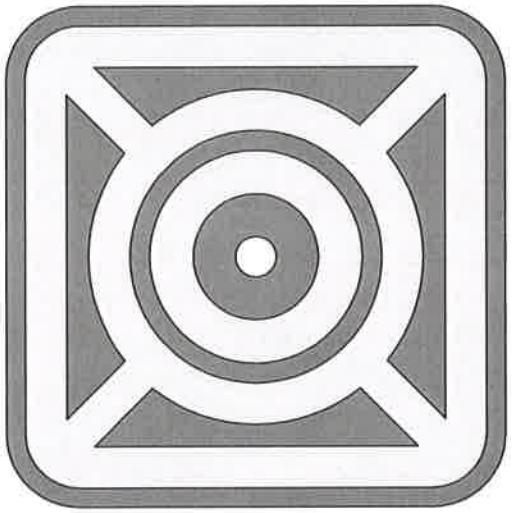

Installation:
1. Duro-Last Metal Plates may be used for installation of insulation; fastening around all penetrations; fastening between the tabs on sheet edges which are perpendicular to the tabs; and on the parapet sections.
2. Duro-Last Metal Plates are also used for installation of the Duro-Roof® system. (See installation instructions for the Duro-Roof® system).
3. When used in the Duro-Roof system install the the plate so that it's edge is ¼ inch (6 mm) from the tab edge.

"Duro-Last" and "The World's Best Roof" are registered marks owned by Duro-Last , Inc. 2009

EXCEPTIONAL® Metals

A Division of Duro-Last® Roofing, Inc.

Scuppers

DATA SHEET

Description:

Scuppers are designed to be used on rectangular outlets extending through walls or raised roof edges. Scuppers are custom prefabricated with one or two skirts or with a single skirt and metal flange.

- Fabricated in 24-gauge vinyl-coated metal with one or two 40-mil 6" membrane skirts.
- Custom configurations, including incorporating the scupper with a collector box, are available upon request.
- Prefabricated scuppers with a 2" terminating flange reduce field fabrication and installation time.
- Available in white, tan, gray, and dark gray vinyl-coated metal.

Contact Duro-Last® or EXCEPTIONAL® Metals to request a color chart, samples and information regarding custom metals and finishes.

Installation:

1. Install in accordance with Duro-Last detail drawings #2041, #2060, and #2061.
2. Any deviation from the requirements set forth in the detail drawings must be pre-approved, in writing, by the EXCEPTIONAL Metals Technical Department.

Warranty:

Duro-Last offers a wide range of warranty coverage for EXCEPTIONAL Metals products when used with the Duro-Last roofing system, including paint and finish.

Technical Services:

Product samples, detail sheets, color chips, and color chart are available for your submittal package. For assistance with questions or submittals, contact your local representative or call EXCEPTIONAL Metals.

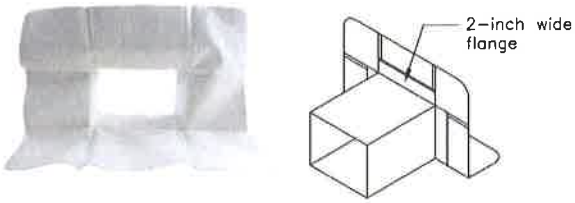

Single Skirt Scupper

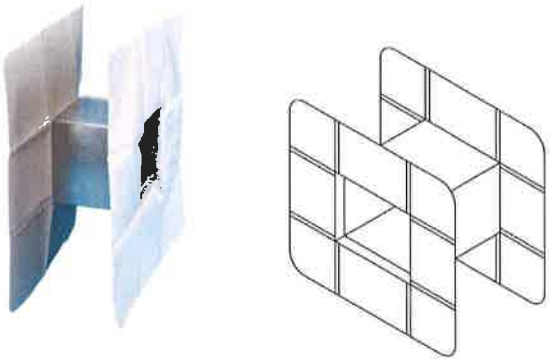

Double Skirt Scupper

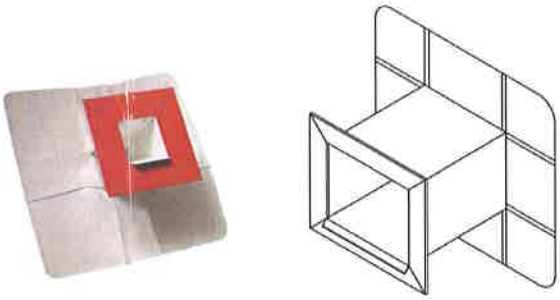

Single Skirt Scupper with Metal Flange

Material – Flange Only	Gauge	Finish
Aluminum	.032	Mill or Kynar®
Stainless Steel	24-gauge	N/A
Bonderized Steel	24-gauge	N/A
Galvalume	24-gauge	Mill or Kynar®
Copper	16 oz.	Mill

"Duro-Last" and "EXCEPTIONAL" are registered marks owned by Duro-Last Roofing, Inc.

Revised 8/12/2012

DURO-LAST® PARAPET FLASHING

DATA SHEET

Description:
Duro-Last® Parapet Flashing is made with Duro-Last specially formulated roofing membrane. The combination of reinforced membrane and prefabrication ensures a long lasting, watertight flashing. The membrane is available in white, tan, gray and dark gray colors as well as in the Designer Series membranes (slate gray Shingle-Ply, sandstone Shingle-Ply and Rock Ply).

Heat welding (hot-air) is used to seam sections of parapet flashing together and also to seam the parapet flashing to the Duro-Last membrane on the roof deck. Welds can be made with a hand-held unit or automatic welder.

The flashing can be mechanically attached or adhered to walls. No matter the method of attachment, mechanical fasteners must be used to secure roof-to-wall transitions and changes in slope, such as steps in the wall profile.

The example drawings on this page will help in understanding the following installation guidelines as well as aid in the understanding the fastener tab spacing that is specified when ordering these prefabricated flashings.

Mechanical Attachment:
If the parapet flashing is to be extended up the wall a short distance and terminated, such as shown in Example #1, the termination height must be at least 8 in. above the roof deck. If the termination height exceeds 28 in. at least one row of fasteners must be used to attach the flashing to the wall as shown in example #2.

When multiple rows of fasteners are required, such as shown in Example #3, the maximum spacing between rows, or between a row of fasteners and the top of the wall, is 28 in.

Refer to the Duro-Last Mechanically Attached Systems specification for substrate and fastener requirements.

Adhered Attachment:
Parapet flashing may be adhered to the wall with adhesive supplied by Duro-Last. The minimum termination height is 8 in. above the roof deck. If the termination height exceeds 60 in., at least one row of mechanical fasteners must be used.

On tall walls multiple rows of fasteners may be required. The maximum spacing between rows, or between a row of fasteners and the top of the wall, is 60 in.

Refer to the Duro-Last Adhered System specification for substrate and adhesive requirements.

Example # 1

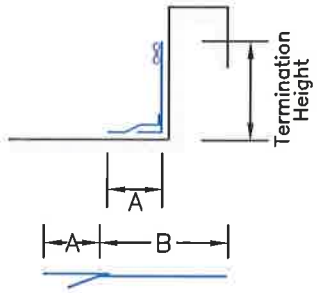

A= 6"(min.) 63"(max.)
B= 8"(min.) 28"(max.)

Example # 2

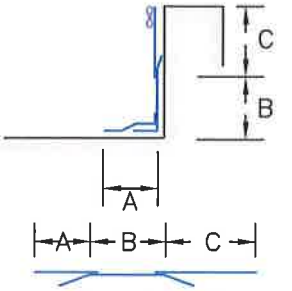

A= 6"(min.) 63"(max.)
B= 6"(min.) 25"(max.)
C= 6"(min.) 28"(max.)

Example # 3

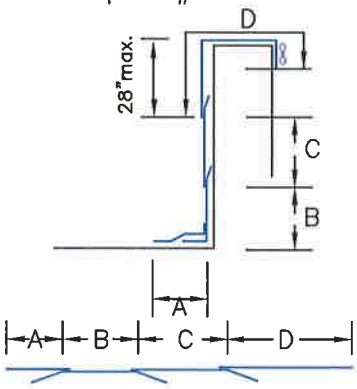

A= 6"(min.) 63"(max.)
B= 6"(min.) 25"(max.)
C= 6"(min.) 28"(max.)
D= 6"(min.) 63"(max.)

Duro-Last: The Proven Performer®

"Duro-Last" and "The World's Best Roof" are registered marks owned by Duro-Last , Inc. 2009

DURO-LAST® PITCH-PAN FILLER (PPF)

DATA SHEET

Description:

Duro-Last® Pitch-Pan Filler (PPF) is an easy flowing, self-leveling sealant for use in pitch-pans. The sealant is UV and impact resistant, and is formulated for adhesion to most types of building materials. Care must be taken since PPF does not adhere to Kynar® coated metal and asphalt materials. The high tack ensures a weather-tight seal around penetrations. It is excellent for use in areas subjected to stress and vibration as well as to expansion and contraction.

Installation:

1. Read the MSDS for the product prior to use.
2. Duro-Last prefabricated vinyl-coated metal pitch-pans are recommended.
3. Pitch-pans must be constructed of sheet metal, wood, PVC pipe or similar, rigid, construction material.
4. If a Duro-Last prefabricated vinyl-coated metal pitch-pan is not being used, a membrane flashing must be used to flash the pitch-pan. Rectangular flashings must be terminated with termination bar or extended into the pitch-pan. Round flashings may be terminated using stainless steel bands or extended into the pitch-pan.
5. The pitch-pan must be clean and dry prior to adding filler material.
6. The bulk of the pitch-pan can be filled with material such as mortar, concrete or insulation. If there are voids in the fill material, take precaution to prevent the PPF from migrating through the fill material.
7. A minimum depth of ½-inch of sealant is required.
8. See detail drawings 4030, 4040 and 4045.
9. Use mineral spirits for cleanup.

Note:

- This product is only intended for pitch-pan applications.

Duro-Last Pitch-Pan Filler (PPF)

Item #	1122
Packaging	10.1 fl. oz. Cartridge (30 per case)
Volume	Each cartridge will fill approximately 18 cubic inches.
Texture	Smooth
Color	Gray
Application Temperature Range	0 – 120 °F
Skin Time	20 - 45 minutes
Cure Time	48 - 72 hours
Odor	Mild
Solubility	Insoluble in water. Soluble in most organic solvents.
Shelf Life	12 months, unopened. Store below 80 °F.

"Duro-Last", and "World's Best Roof" are registered marks owned by Duro-Last, Inc. 11/21/2012

EXCEPTIONAL® Metals

A Division of Duro-Last® Roofing, Inc.

Pitch Pan

DATA SHEET

Description:

Prefabricated Pitch Pans deliver a watertight seal around rooftop protrusions.

- Fabricated from 24-gauge vinyl-coated metal and 6" Duro-Last® membrane skirt to exact specification.
- 8" height minimum.
- Custom designs available upon request.
- Pitch pan is shipped with one corner open to install around existing penetrations.

Contact Duro-Last or EXCEPTIONAL® Metals to request a color chart, samples and information regarding custom metals and finishes.

Installation:

1. Install in accordance with Duro-Last detail drawing #4045.
2. Any deviation from the requirements set forth in the detail drawings must be pre-approved, in writing, by the EXCEPTIONAL Metals Technical Department.

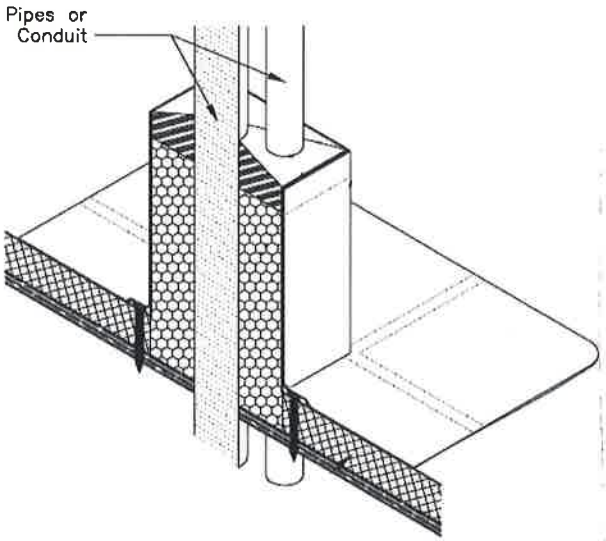

Warranty:

Duro-Last offers a wide range of warranty coverage for EXCEPTIONAL Metals products when used with the Duro-Last roofing system, including paint and finish.

Technical Services:

Product samples, detail sheets, color chips, and color chart are available for your submittal package. For assistance with questions or submittals, contact your local representative or call EXCEPTIONAL Metals.

"Duro-Last" and "EXCEPTIONAL" are registered marks owned by Duro-Last Roofing, Inc.

Revised 8/12/2012

DURO-LAST® SUREBOND SB-240 MASTIC

DATA SHEET

Description:
Duro-Last®, Inc. supplies trowelable mastic for use with the Duro-Last roofing system. Surebond SB-240 is medium weight solvent release mastic that utilizes synthetic rubber and resins as base products which provide excellent water-resistant properties and adhesion.

SB-240 is moisture-resistant, which is most important with today's high tech single-ply materials. SB-240 is normally used as an underseal. This product cannot be used as a splicing cement, pitch pocket filler, night seal or perimeter flashing adhesive. It is not contact cement, but a sealant.

SB-240 is formulated for adhesion to all types of building materials including masonry, wood, metal, insulation, and galvanized flashing. Its high tack ensures a weather-tight seal around penetrations.

SB-240 is odorless and easy to use. Cleanup is easily accomplished with Mineral Spirits or Naphtha.

Material Safety Data Sheet:
Product Name: SB-240 Single Ply Roofing Mastic

Installation:
1. SB-240 can be used for back-seal, scuppers, drains, flashing details and under the membrane.
2. In no instance shall the SB-240 be used in such a way that it would be subject to permanent exposure to ultraviolet radiation.

Note:
- Use extreme caution when using solvents for any cleanup.
- SB-240 is available in five gallon pails, which will seal approximately 450 ft.² (42 m²) of Duro-Last membrane.
- SB-240 must be installed in accordance with current Duro-Last, Inc. specifications.

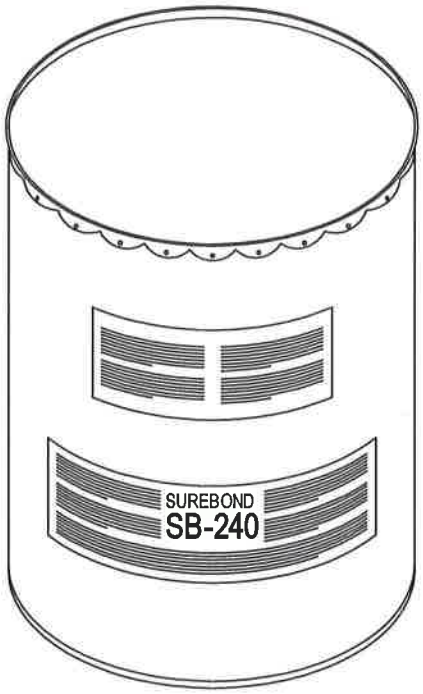

SURE-BOND-240 MASTIC PROPERTIES	
Color	Gray
Base	Synthetic rubber and resin
Viscosity	Medium weight
Type	Solvent release
Storage	Above 40°F (4°C) and below 90°F (32°C)

Duro-Last: The Proven Performer®

"Duro-Last" and "The World's Best Roof" are registered marks owned by Duro-Last , Inc. 2009

DURO-LAST® SB IV ADHESIVE

DATA SHEET

Description:
Duro-Last® SB IV Adhesive is a low VOC solvent-based adhesive used to bond Duro-Last roofing membrane to a variety of substrates on both horizontal and vertical surfaces. Acceptable substrates include plywood, oriented strand board (OSB), structural concrete, DensDeck® Prime, SECUROCK® Gypsum-Fiber Roof Board and ACFoam®-IV polyisocyanurate insulation. Contact the Duro-Last Engineering Services Department with questions regarding substrates.

SB IV Adhesive has a VOC content less than 250 g/L and meets all VOC restrictions and regulations in the United States.

Material Safety Data Sheet (MSDS):
Product Name: Duro-Last SB IV Adhesive.
Trade Name: Low VOC PVC Bonding Adhesive.
MSDS Number / Product Code: LA432M.

Precautions:
1. Review MSDS for safety information prior to use.
2. Extremely flammable. Do not expose to heat, flame or sparks. Do not smoke while applying.
3. Use only in well ventilated areas and avoid breathing vapors.
4. Keep container closed when not in use.
5. When transferring adhesive between containers, ensure that both containers are grounded.
6. Treat empty containers with caution since they may contain flammable vapors.
7. Store in the original, unopened, container at temperatures between 60 °F (16 °C) and 80 °F (27 °C) and out of direct sunlight.

Installation:
1. Apply to surfaces which are clean, smooth, dry and free of oil and grease.
2. Only apply adhesive when the ambient temperature is at least 40 °F (5 °C) and rising.
3. Stir adhesive vigorously by hand to achieve homogeneous mixture prior to application. Do not use electrical equipment or open flame near adhesive.
4. Thinning the adhesive is not allowed.
5. Using a 3/8 inch (medium) nap solvent resistant roller apply evenly at a coverage rate of 120 square feet per gallon per surface to both the backside of the membrane and to the substrate. This gives a net coverage rate of 60 square feet per gallon (i.e. approximately 1.7 gallons per 100 square feet). The coverage rate will vary depending upon the porosity of the substrate.
6. Do not apply adhesive to the membrane where hot-air welding will be performed.
7. Allow adhesive to dry (approximately 5-10 minutes) until it does not stick or form strings when a dry finger is pushed into it and removed. The dry time will vary due to ambient air conditions.
8. Open time prior to mating the membrane to the surface may extend up to 60 minutes depending on the ambient air conditions. However, the installer is urged to apply the membrane to the substrate as soon as the adhesive is ready.
9. Mate the adhesive coated membrane to the adhesive coated substrate slowly and evenly to avoid trapping air and to minimize wrinkles.
10. Immediately broom or roll the membrane into the adhesive to ensure proper bonding.

DURO-LAST SB IV ADHESIVE PHYSICAL PROPERTIES		
Packaging	5 gallon pail.	
Weight	7 lb. per gallon	35 lb. per pail
Base	Synthetic Polymer	
Solvent	Ketone blend.	
Flash Point	< 0 ° F	< -18 °C
Color	Amber	
Odor	Strong solvent smell.	
VOC Content	199.4 g / L	
Viscosity	1,800 - 2,400 cps	
Total Solids	24% ± 1%	
Coverage	120 ft² per gallon per surface for a net coverage of 60 ft² per gallon. (i.e. 1.7 gallons per 100 ft²)	
Dry Time	5 - 10 minutes.	
Open Time	Up to 60 minutes.	
Shelf Life	1 year, unopened.	

Duro-Last: The Proven Performer®

"Duro-Last" and "The World's Best Roof" are registered marks owned by Duro-Last , Inc. 2009

DURO-LAST® STACK FLASHING

DATA SHEET

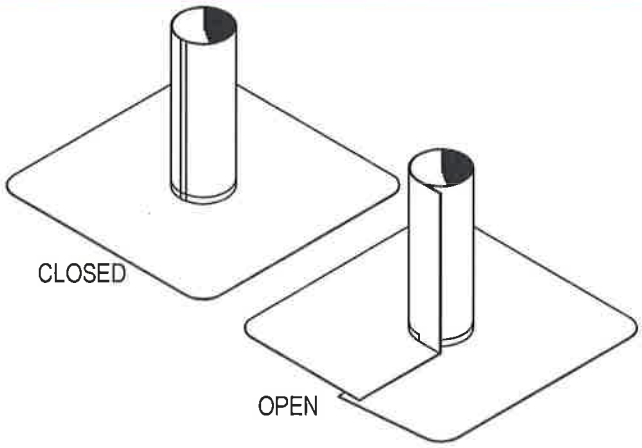

Description:
Duro-Last® Stack Flashings are required for all round penetrations encountered on a roofing project. The stack flashings are made with Duro-Last specially formulated roofing membrane. The combination of reinforced membrane and prefabrication ensures a long lasting, watertight flashing.

Stack flashings are available in white, tan, gray and dark gray colors. They can also be ordered with Designer Series membrane (slate gray Shingle-Ply, sandstone Shingle-Ply or Rock-Ply) bases and solid color risers. They are available in diameters of 1 in. (25 mm), 1.5 in. (38 mm) and in 1 in. increments between 2 and 15 in. (51-381 mm). Stack Flashings with diameters of 16 in. (406 mm) and larger are available in 2 in. (51 mm) increments.

The flashings are manufactured oversized to account for the thickness a schedule 40 pipe wall by the following amounts:

- 1.5 - 4 in. (38 - 101 mm) diameter stack flashings are 5/8 in. (15 mm) oversized.
- All other sizes are 3/8 in. (9 mm) oversized.

Installation:

1. The roof membrane installed around the penetration must be fastened prior to installing the stack flashing. Use the same fastener spacing that was used to install the roof membrane but do not exceed 18 in. (457 mm) on center. At least one fastener must be installed. On reroofing applications, remove the existing flashings to ensure a watertight fit.
2. Place the stack flashing around the penetration. Heat weld the vertical seam if the stack was ordered "open".
3. Weld the stack flashing skirt to the roof membrane. Care should be taken to smooth out the skirt so that it is wrinkle-free.
4. Apply a bead of Duro-Caulk Plus® to the penetration 1/4 in. (6 mm) below the top of the stack flashing.
5. Install a stainless steel band approximately 1/4 in. (6 mm) from the top of the stack flashing. Tighten the band to draw the flashing firmly into the sealant. Apply a bead of the Duro-Caulk Plus® around the top of the flashing to assure a positive seal.
6. See details 4070, 4080 and 4081 for information on installing stack flashings to specific types of round penetrations.

Note:

- Stack flashings and bands shall be furnished by Duro-Last, Inc.
- Field fabrication of flashings for round penetrations is not allowed.
- Stack flashings with diameters 16 in. (406 mm) and larger are available "open" only.
- An "open" stack flashing requires a heat weld (hot-air) to close the flashing. The extra material necessary for this weld is included as part of the stack flashing.

Stack Flashing Dimensions				
Diameter	Available		Height	Base/Skirt
	Closed	Open		
1 in. (25 mm)	Yes	No	8 in. (203 mm)	18 x 18 in. Base (457 x 457 mm)
1.5 in. (38 mm)	Yes	Yes	8 in. (203 mm)	18 x 18 in. Base (457 x 457 mm)
2 - 8 in. (51 - 203 mm)	Yes	Yes	8 in. (203 mm)	18 x 18 in. Base (457 x 457 mm)
9 - 15 in. (228 - 381 mm)	Yes	Yes	8 in. (203 mm)	24 x 24 in. Base (609 x 609 mm)
16 in. (406 mm) and Larger	No	Yes	8 in. (203 mm)	6 or 12 in. Skirt (152 or 305 mm)

Duro-Last: The Proven Performer®

"Duro-Last" and "The World's Best Roof" are registered marks owned by Duro-Last , Inc. 2009

DURO-LAST
THE WORLD'S BEST ROOF®

PRODUCT DATA SHEET

DURO-MASTIC®

DESCRIPTION:

Duro-Mastic® is a high-performance elastic butyl tape for use with the Duro-Last® roofing system. Duro-Mastic is excellent in areas subjected to stress and vibrations as well as expansion and contraction. Duro-Mastic is especially effective in roofing applications as a sealant against moisture penetrations around flashings.

Duro-Mastic is excellent in areas requiring superior tensile strength and extensibility, in all climates, which is most important with today's high tech single-ply materials. Duro-Mastic is formulated for adhesion to all types of building materials. Its superior tack affords tenacious adhesion to aluminized steel, galvanized metal, masonry, and wood to ensure a weather tight seal.

Duro-Mastic is odorless, easy to use, and has high impact resistance.

ORDERING:

Duro-Mastic is available, with a paper backing, on 3/4-inch by 35-foot rolls, and packaged in cases of 10 rolls each.

STORAGE AND HANDLING

1. Protect product from freezing.
2. Store product between 40° F and 80° F for maximum shelf life. Shelf life is one year in unopened container when following these recommended storage procedures.

PRECAUTIONS:

1. Read Safety Data Sheets (SDS) prior to using.
2. Wear proper personal protective equipment, such as gloves and eye protection, per the SDS.
3. **For industrial use only. Do not take internally. Keep out of reach of children.**

INSTALLATION:

1. Limitations
   a. Apply to clean, dry surfaces free of contaminants and frost that can adversely affect adhesion.
   b. Use in applications in which ultraviolet radiation exposure is not probable or possible.

2. Unroll and apply with constant, even pressure. Remove paper backing once ready to install membrane.
3. A typical application is to use Duro-Mastic between the membrane and wall before the installation of Termination Bar (see Detail 6020).
4. Refer to the most current Duro-Last specifications and details for more installation procedures.

DURO-MASTIC PROPERTIES	
Service Temperature	-60° F – 212° F
Specific Gravity	1.45
Solubility in Water	Insoluble
Solubility in Solvents	Soluble in Most Solvents
Flexibility	No Cracking at -60° F
Odor	Odorless
Sag	None
Heat Aging Cracking	None
Heat Resistance at 190° F	No Blistering or Flow

Duro-Last, Duro-Mastic and "World's Best Roof" are registered marks owned by Duro-Last, Inc.
Created: 01/01/2009 Revised: 06/04/2014

DURO-LAST® TERMINATION BAR

DATA SHEET

Description:
Duro-Last® Termination Bar (available in white, gray and tan colors) is fabricated from a rigid exterior vinyl with slotted holes 6 inch (152 mm) on center. Duro-Last termination bar may be used as perimeter detail for the Duro-Last roofing system and as termination on any square or rectangular penetration. Because of its symmetrical design, it is reversible.

Duro-Last Termination Bar is available in 10 ft. (3 m) lengths only. Duro-Last, Inc. will supply the termination bar in multiples of 10 ft. (3 m) and has two standard packages. The small tube package contains a maximum of 170 ft. (52 m) while a large box contains a maximum of 500 ft. (152 m).

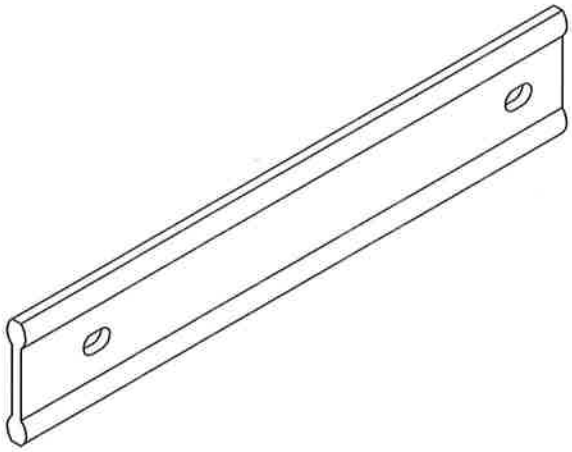

Material Safety Data Sheet:
Product: 10 foot Extrusions
MSDS Number: 1225

Installation:
1. Duro-Last Termination Bar shall be fastened 6 inch (152 mm) on center with approved fasteners.
2. All termination bar must be fastened 1 inch (25 mm), maximum, from each corner or end of the bar.
3. The top edge of all sections of termination bar must be caulked.
4. It is necessary to leave a ¼ inch (6.3 mm) space between all sections of termination bar to account for expansion and contraction.
5. All vertical applications require caulk on both sides.
6. Refer to details 3010 & 3020 for installation information.

Duro-Last: The Proven Performer®

"Duro-Last" and "The World's Best Roof" are registered marks owned by Duro-Last , Inc. 2009

EXCEPTIONAL® Metals

A Division of Duro-Last® Roofing, Inc.

2-Piece Snap-On Compression

DATA SHEET

Description:

The 2-Piece Snap-On Compression system may be used as a perimeter flashing for the Duro-Last® roofing system. The system consists of a 24-gauge Galvalume® base and a snap-on metal cover.

- Base and cover is fabricated in 10' lengths; 3" – 8" widths. Manufactured from various metals (see chart below).
- Cover is double-hemmed to prevent roof material from excessive wear.
- Installs on 2/12 pitch and lower.
- Ready to assemble inside and outside corners are available.

Contact Duro-Last or EXCEPTIONAL® Metals to request a color chart, samples and information regarding custom metals and finishes.

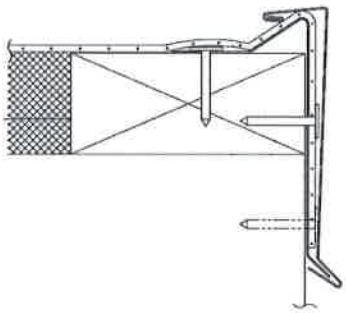

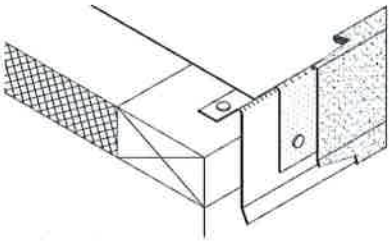

Energy Efficiency:

LEED® and ENERGY STAR® compliant; Recyclable.

Installation:

1. A wood nailer is required if 1" or greater of insulation is used.
2. This nailer should be attached to the wall in accordance with ANSI/SPRI ES-1 3.9.
3. Install in accordance with Duro-Last detail drawing #3110.
4. Any deviation from the requirements set forth in the detail drawings must be pre-approved, in writing, by the EXCEPTIONAL Metals Technical Department.

Codes and Standards:

- ANSI/SPRI ES-1 Compliant with 3" – 8" base and cover.
- Meets TAS 111-95 Test with 4" and 6".
- FM Approval on 4" and 6".

Material	Gauge	Finish
Aluminum	.040	Mill or Kynar®
Stainless Steel	24-gauge	N/A
Bonderized Steel	24-gauge	N/A
Galvalume	24-gauge	Mill or Kynar®
Copper	16 oz.	Mill

Warranty:

Duro-Last offers a wide range of warranty coverage for EXCEPTIONAL Metals products when used with the Duro-Last roofing system, including paint and finish.

Technical Services:

Product samples, detail sheets, color chips, and color chart are available for your submittal package. For assistance with questions or submittals, contact your local representative or call EXCEPTIONAL Metals.

"Duro-Last" and "EXCEPTIONAL" are registered marks owned by Duro-Last Roofing, Inc.

Revised 8/30/2012

Attachment C: Sample Contract

ATTACHMENT C
SAMPLE CONTRACT

COLUMBIA COUNTY COURTHOUSE
RE-ROOFING CONTRACT

This Agreement is made and entered into by and between Columbia County, a political subdivision of the State of Oregon, hereinafter referred to as "Owner," and _____hereinafter referred to as "Contractor."

WITNESSETH:

IT IS HEREBY AGREED by and between the parties above-mentioned for and in consideration of the mutual promises hereinafter stated as follows:

1. Effective Date. This Agreement will be effective when it has been executed by both Owner and Contractor. However, Contractor shall not commence work on the project until Contractor has received a notice to proceed from the County.

2. Completion Date. The completion date for this Agreement shall be no later than ___ days after Notice to Proceed is issued by the County's Representative.

3. Project Summary. This Agreement is for the re-roofing of the Columbia County Courthouse Annex Building, located at 230 Strand Street, St. Helens, Oregon, as more particularly described in Exhibit A, Invitation to Bid, and Exhibit B, Contractor's Proposal.

4. Exhibits. The following exhibits are attached hereto and are incorporated herein by this reference:

   Exhibit A- Invitation to Bid (ITB)
   Exhibit B- Contractor's Proposal
   Exhibit C- Prevailing Wage Rates

5. Contractor's Services. Contractor agrees to provide the services described in the ITB, and as proposed in Contractor's Bid.

6. Consideration. Owner shall pay Contractor $_____, said amount to be the complete compensation to Contractor for the services performed under this Agreement. Unless otherwise agreed to in writing by the parties, payments shall be made upon completion of the project. This Agreement is subject to the appropriation of funds by Owner, and/or the receipt of funds from state sources. In the event sufficient funds shall not be appropriated, and/or received by Owner for the payment of consideration required to be paid under this Agreement, Owner may terminate this Agreement without penalty in accordance with Section 20 of this Agreement.

7. Contract Representatives. Contract representatives for this Agreement shall be:

For the Owner:	For the Contractor:
Casey Garrett, Facilities Services Manager	*Name, Title*
Land Development Services	*Department*
Columbia County	*Company*
230 Strand Street	*Address*

ATTACHMENT C
SAMPLE CONTRACT

St. Helens, OR 97051 *City, State zip code*

All correspondence shall be sent to the above addressees when written notification is necessary. The Contractor understands and agrees that only the Owner's Contract Representative is authorized to give Contractor work authorizations, issue written approvals and notices to proceed. If any work is done by Contractor without prior written authorization by the Owner's Contract Representative, the Owner will not be obligated to pay for such work. Contract representatives can be changed by providing written notice to the other party at the address listed.

8. Permits; Licenses; Bonds; Qualifications. Unless otherwise specified, Contractor shall procure all permits, licenses and bonds, pay all charges and fees and give all notices necessary for performance of this Agreement prior to commencement of work. Contractor, by entering into this Agreement represents, that all personnel assigned to the work required under this Agreement are fully qualified to perform the work to which they will be assigned in a skilled and workmanlike manner and, if required to be registered, licensed or bonded by the state of Oregon, are so registered, licensed or bonded.

9. Compliance with Codes and Standards. Contractor shall at all times observe and comply with all federal and state laws, administrative rules and regulations issued there under, and with all applicable ordinances, and building, health and sanitation laws and codes. Contractor shall engage in no activity which creates an actual conflict of interest or violates the Code of Ethics as provided by ORS Chapter 244.

10. Reports. Contractor shall provide Owner's Contract Representative with periodic reports about the progress of the project as requested by Owner.

11. Ownership of Documents. Owner will own the documents and data prepared and/or compiled by Contractor pursuant to this agreement, including working papers, drawings, and other material necessary for complete understanding of the plans. Contractor hereby conveys, transfers, and grants to Owner all copyrights and rights of reproduction to all such documents. Owner agrees not to assign or transfer the drawings which would duplicate the work product represented in the drawings at another location without the written consent of the Contractor. Contractor shall retain the right to reproduce the documents for purposes related to this project, for Contractor's archival records, and for marketing purposes. Within 120 days of the completion of the project, the Contractor will provide to the Owner one reproducible set of as-built drawings based on mark-ups by the Contractor, which are reviewed for general conformance by the Contractor and appropriate consultants. In addition, Contractor will provide to the Owner digital copies of AutoCAD formatted construction documents and MS Word formatted specifications in CD-ROM format.

12. Guarantee. Contractor guarantees all work under this Agreement against all defects in materials and workmanship. This guarantee shall extend from the date of completion by the Owner for the period of a minimum of one year, or longer, if so specified in the Contract Documents. Contractor shall promptly make all necessary repairs or replacements to correct any defects in workmanship or materials for which notice in writing has been sent to the Contractor from the Owner's Contract Representative within the guarantee period. In the event Contractor fails to take any action to correct conditions covered by this guarantee promptly after notice of such condition, Owner may do so, and Contractor and its surety shall be liable for the cost thereof. Normal wear and

tear and the results of accidents not chargeable to Contractor or its agents are excluded from the above requirements.

13. Independent Contractor. Contractor is engaged hereby as an independent contractor and shall not be considered an employee, agent, partner, joint venturer or representative of Owner for any purpose whatsoever. Owner does not have the right of direction or control over the manner in which Contractor delivers services under this Agreement and does not exercise any control over the activities of the Contractor, except the services must be performed in a manner that is consistent with the terms of this Agreement. Owner shall have no obligation with respect to Contractor's debts or any other liabilities of Contractor. Contractor shall be responsible for furnishing all equipment necessary for the performance of the services required herein. In addition:

    A. Contractor will be solely responsible for payment of any Federal or State taxes required as a result of this Agreement.

    B. This Agreement is not intended to entitle Contractor to any benefits generally granted to Owner's employees. Without limitation, but by way of illustration, the benefits which are not intended to be extended by this Agreement to the Contractor are vacation, holiday and sick leave, other leaves with pay, tenure, medical and dental coverage, life and disability insurance, overtime, social security, workers' compensation, unemployment compensation, or retirement benefits (except insofar as benefits are otherwise required by law if the Contractor is presently a member of the Public Employees Retirement System).

    C. The Contractor is an independent contractor for purposes of the Oregon workers' compensation law (ORS Chapter 656) and is solely liable for any workers' compensation coverage under this Agreement. If the Contractor has the assistance of other persons in the performance of the Agreement, the Contractor shall qualify and remain qualified for the term of this Agreement as a carrier-insured or self-insured employer under ORS 656.407. If the Contractor performs this Agreement without the assistance of any other person, unless otherwise agreed to by the parties, Contractor shall apply for and obtain workers' compensation insurance for itself as a sole proprietor under ORS 656.128.

14. Statutory Provisions. Pursuant to the requirements of ORS 279C.500 through 279C.530 and Article XI, Section 10 of the Oregon Constitution, the following terms and conditions are made a part of this Agreement:

    A. Contractor shall:

        (1) Make payment promptly, as due, to all persons supplying to Contractor labor or material for the prosecution of the work provided for in this Agreement.

        (2) Pay all contributions or amounts due the Industrial Accident Fund from the Contractor or any subcontractor incurred in the performance of this Agreement.

        (3) Not permit any lien or claim to be filed or prosecuted against County on account of any labor or material furnished.

(4) Pay to the Department of Revenue all sums withheld from employees under ORS 316.167.

(5) Demonstrate that an employee drug testing program is in place.

B. If Contractor fails, neglects or refuses to make prompt payment of any claim for labor or services furnished to Contractor or a subcontractor by any person in connection with this Agreement as the claim becomes due, the proper officer or officers representing County may pay such claim to the person furnishing the labor or services and charge the amount of the payment against funds due or to become due Contractor by reason of this Agreement.

If the Contractor or a first-tier subcontractor fails, neglects or refuses to make payment to a person furnishing labor or materials in connection with this Agreement within 30 days after receipt of payment from the Owner, the Contractor or first-tier subcontractor shall owe the person the amount due plus interest charges commencing at the end of the 10-day period that payment is due under ORS 279C.580(4) and ending upon final payment, unless payment is subject to a good faith dispute as defined in ORS 279C.580. The rate of interest charged to the Contractor or first-tier subcontractor on the amount due shall equal three times the discount rate on 90-day commercial paper in effect at the Federal Reserve Bank in the Federal Reserve district that includes Oregon on the date that is 30 days after the date when payment was received from the Owner or from Contractor, but the rate of interest may not exceed 30 percent. The amount of interest may not be waived.

If the Contractor or a subcontractor fails, neglects or refuses to make payment to a person furnishing labor or materials in connection with this Agreement, the person may file a complaint with the Construction Contractors Board, unless payment is subject to a good faith dispute as defined in ORS 279C.580.

C. No person may be employed for more than 10 hours in any one day, or 40 hours in any one week, except in cases of necessity, emergency, or where the public policy absolutely requires it, and in such cases, except in cases of contracts for personal services as defined in ORS 279C.100, the employee shall be paid at least time and a half pay:

(1) For all overtime in excess of eight hours in any one day or 40 hours in any one week when the work week is five consecutive days, Monday through Friday; or

(2) For all overtime in excess of 10 hours in any one day or 40 hours in any one week when the work week is four consecutive days, Monday through Friday; and

(3) For all work performed on Saturday and on any legal holiday specified in ORS 279C.540.

Contractor and any employer under this Agreement must give notice in writing to employees who work under this Agreement, either at the time of hire or before commencement of work on the contract, or by posting a notice in a location frequented by employees, of the number of hours per day and days per week, that the employees may be required to work.

ATTACHMENT C
SAMPLE CONTRACT

D. Contractor shall promptly, as due, make payment to any person, co-partnership, association or corporation, furnishing medical, surgical and hospital care services or other needed care and attention, incident to sickness and injury, to the employees of Contractor, of all sums that Contractor agrees to pay for the services and all moneys and sums that Contractor collects or deducts from the wages of employees under any law, contract or agreement for the purpose of providing or paying for such services.

E. All subject employers working under this Agreement, including Contractor, shall comply with ORS 656.017 and provide the required Workers' Compensation coverage, unless such employers that are exempt under ORS 656.126. Contractor shall ensure that each of its subcontractors complies with these requirements.

F. Contractor shall include in each subcontract for property or services entered into by the Contractor and a first-tier subcontractor, including a material supplier, for the purpose of performing a construction contract:

(1) A payment clause that obligates the Contractor to pay the first-tier subcontractor for satisfactory performance under its subcontract within 10 days out of such amounts as are paid to the Contractor by Owner under this Agreement; and

(2) An interest penalty clause that obligates the Contractor, if payment is not made within 30 days after receipt of payment from Owner, to pay to the first-tier subcontractor an interest penalty on amounts due in the case of each payment not made in accordance with the payment clause included in the subcontract under paragraph (1) of this subsection. Contractor or any first-tier subcontractor may not be obligated to pay an interest penalty if the only reason that Contractor or the first-tier subcontractor did not make payment when payment was due is that Contractor or first-tier subcontractor did not receive payment from Owner or Contractor when payment was due. The interest penalty shall be:

(a) For the period beginning on the day after the required payment date and ending on the date on which payment of the amount due is made; and

(b) Computed at the rate specified in ORS 279C.515(2).

G. Contractor shall include in each of Contractor's subcontracts, for the purpose of performance of such contract condition, a provision requiring the first-tier subcontractor to include a payment clause and an interest penalty clause conforming to the standards of subsection F of this section in each of the first-tier subcontractor's subcontracts and to require each of the first-tier subcontractor's subcontractors to include such clauses in their subcontracts with each lower-tier subcontractor or supplier.

H. The clauses required by subsections F and G of this section are not intended to impair the right of Contractor or a subcontractor at any tier to negotiate, and to include in the subcontract, provisions as allowed by ORS 279C.580(5). Such

clauses and provisions are subject to the provisions of ORS 279C.580(6) through (10).

I. The specifications to this Agreement include the prevailing rate of wage that must be paid to workers in each trade or occupation required for the public works employed in the performance of this Agreement either by the Contractor or any subcontractor or other person doing or contracting to do the whole or any part of the work contemplated by this Agreement. All workers shall be paid not less than the specified minimum hourly rate of wage.

J. A fee is required to be paid to the Commissioner of the Bureau of Labor and Industries as provided in ORS 279C.825(1). The fee shall be paid to the Commissioner under the administrative rule of the Commissioner.

K. This Agreement is expressly subject to the debt limitation of Oregon counties set forth in Article XI, Section 10 of the Oregon Constitution, and is contingent upon funds being appropriated therefor. Any provisions herein which would conflict with law are deemed inoperative to that extent.

15. Non-Discrimination. Contractor agrees that no person shall, on the grounds of race, color, creed, national origin, sex, marital status, handicap or age, suffer discrimination in the performance of this Agreement when employed by Contractor. Contractor certifies that it has not discriminated and will not discriminate, in violation of ORS 279A.110, against any minority, women or emerging small business enterprise or against a business enterprise that is owned or controlled by or that employs a disabled veteran in obtaining any required subcontract.

16. Assignment; Subcontracts. Contractor shall not assign, subcontractor delegate the responsibility for providing services hereunder to any other person, firm or corporation without the express written permission of the Owner. Any attempted assignment or subcontract by Contractor without the written consent of Owner shall be void. Contractor shall be fully responsible for the acts or omissions of any assigns or subcontractors and of all persons employed by them, and the approval by Owner of any assignment or subcontract shall not create any contractual relation between the assignee or subcontractor and Owner.

17. Nonwaiver. The failure of the Owner to enforce any provision of this Agreement shall not constitute a waiver by the Owner of that or any other provision of the Agreement.

18. Indemnity. Contractor shall indemnify, defend, save, and hold harmless the Owner, its officers, agents and employees from any and all claims, suits, actions, losses, damages, liabilities, costs and expenses of any nature, resulting from, arising out of, or relating to the activities of the Contractor or Contractor's officers, employees, subcontractors, or agents under this Agreement.

Contractor shall cause all subcontractors to indemnify, defend, save, and hold harmless the Owner, its officers, agents and employees from any and all claims, suits, actions, losses, damages, liabilities, costs and expenses of any nature, resulting from, arising out of, relating to the activities of the subcontractor or subcontractor's officers, employees, subcontractors, or agents for the work described herein.

19. Insurance.

ATTACHMENT C
SAMPLE CONTRACT

A. Contractor shall purchase and maintain, and shall require its subcontractors to purchase and maintain, for the entire period that work is performed under this Agreement the following policies of insurance to protect Owner and its officers, agents and employees:

(1) Commercial general liability insurance coverage from an insurance company authorized to do business in Oregon in an amount not less than $2,000,000 per occurrence for bodily injury and property damage.

(2) Automobile liability insurance covering each automobile utilized in the performance of this Agreement from an insurance company authorized to do business in Oregon in an amount not less than $2,000,000 per occurrence for bodily injury and property damage.

(3) Workers' Compensation and Employer's liability meeting statutory limits mandated by State and federal laws.

B. Prior to commencing work, Contractor and any subcontractors shall provide Owner a certificate or certificates of insurance in the amounts required which names Columbia County, its officers, agents and employees as additional insureds to the Commercial General and Automobile Liability policies as stated above. The certificates shall be accompanied by additional insured endorsements identifying Columbia County, its officers, agents and employees as additional insureds. Coverage will be primary and non-contributory with any other insurance and self-insurance. Contractor agrees to provide, and shall require its subcontractor to provide, Owner at least thirty (30) days prior written notice that any insurance coverage required by this paragraph will be canceled, not renewed, modified in any material way, or changed to make the coverages no longer meet the minimum requirements of this Contract. In the event of any discrepancy in the various provisions of this Agreement as to the amount and types of insurance required, the highest policy limits specified and all of the coverage types specified shall be required.

C. All of Contractor's and subcontractor's liability insurance policies, with the exception of worker's compensation, shall contain a waiver of subrogation against the County.

20. Termination. This Agreement may be terminated at any time in whole or in part by mutual consent of both parties. The County may terminate this Agreement upon (30) days advance written notice delivered by registered or certified mail, or in person, to the Contractor. The Owner may terminate this Agreement, effective upon delivery of written notice to Contractor, or at such later date as may be established by the Owner under the following conditions:

A. If Contractor fails to perform the work in a manner satisfactory to Owner.

B. If any license or certificate required by law or regulation to be held by Contractor to provide the services required by this Agreement is for any reason denied, revoked, or not renewed.

C. If funding becomes inadequate to allow the work to continue in accordance with the project schedule.

In case of termination, Contractor shall be required to repay to Owner the amount of any funds advanced to Contractor which Contractor has not earned or expended through the provision of services in accordance with this Contract. However, Contractor shall be entitled to retain all costs incurred and fees earned by Contractor prior to that termination date, and any amounts remaining due shall be paid by Owner not to exceed the maximum amount stated above and decreased by any additional costs incurred by Owner to correct the work performed. The rights and remedies of the Owner related to any breach of this Agreement by Contractor shall not be exclusive, and are in addition to any other rights and remedies provided by law or under this Contract. Any termination of this Agreement shall be without prejudice to any obligations or liabilities of either party already accrued before such termination.

21. Time of the Essence. The parties agree that time is of the essence in this Agreement. Contractor shall commence work under this Agreement upon receipt of a Notice to Proceed from the Owner's Contract Representative and shall prosecute the work diligently, so as to proceed with and complete the work in this Project in a timely manner. Any failure of the Contractor to perform work on time is a material breach of this Agreement.

22. Mediation. In the event of a dispute between the parties arising out of or relating to this Agreement, the parties agree to submit such dispute to a mediator agreed upon by both parties as soon as practicable after the dispute arises, and preferably before commencement of litigation or any permitted arbitration. The parties agree to exercise their best efforts in good faith to resolve all disputes in mediation.

23. Choice of Law. This Agreement shall be governed by the laws of the State of Oregon.

24. Venue. Venue relating to this Agreement shall be in the Circuit Court of the State of Oregon for Columbia County, located in St. Helens, Oregon.

25. Attorneys Fees. In the event an action, suit or proceeding, including appeal therefrom, is brought for failure to observe any of the terms of this Agreement, each party shall be responsible for its own attorneys fees, expenses, costs and disbursements for said action, suit, proceeding or appeal.

26. Severability. Should any provision or portion thereof of this Agreement at any time be in conflict with any law, ruling or regulation, or be unenforceable for any reason, then such provision shall continue in effect only to the extent that it remains valid. In the event any provision of this Agreement becomes less than fully operative or is for any reason held invalid or unconstitutional by any court of competent jurisdiction, such portion shall be deemed a separate, distinct and independent provision and the remaining portion of that provision and all other provisions of this Agreement shall, nevertheless, remain in full force and effect.

27. Third Party Beneficiaries. The Oregon Judicial Department is a third party beneficiary to this Agreement. There are no other third party beneficiaries.

28. ENTIRE AGREEMENT. THIS AGREEMENT (INCLUDING EXHIBITS) CONSTITUTES THE ENTIRE AGREEMENT BETWEEN THE PARTIES. NO WAIVER, CONSENT, MODIFICATION OR CHANGE OF TERMS OF THIS AGREEMENT SHALL BIND EITHER PARTY UNLESS IN WRITING AND SIGNED BY BOTH PARTIES. SUCH WAIVER, CONSENT, MODIFICATION OR CHANGE, IF MADE, SHALL BE EFFECTIVE ONLY IN THE SPECIFIC INSTANCE AND FOR THE SPECIFIC

ATTACHMENT C
SAMPLE CONTRACT

PURPOSE GIVEN. THERE ARE NO UNDERSTANDINGS, AGREEMENTS, OR REPRESENTATIONS, ORAL OR WRITTEN, NOT SPECIFIED HEREIN REGARDING THIS AGREEMENT. CONTRACTOR, BY THE SIGNATURE OF ITS AUTHORIZED REPRESENTATIVE(S) BELOW, HEREBY ACKNOWLEDGES THAT IT HAS READ THIS AGREEMENT, UNDERSTANDS IT AND AGREES TO BE BOUND BY ITS TERMS AND CONDITIONS.

IN WITNESS WHEREOF, the parties hereto have executed, or have caused to be executed by their duly authorized officials, this Agreement between Owner and Contractor in duplicate on the respective dates indicated below.

CONTRACTOR:

By:_____

Title:_____

Date:_____

OWNER:

BOARD OF COUNTY COMMISSIONERS
FOR COLUMBIA COUNTY, OREGON

By:_____
Henry Heimuller, Chair

By:_____
Anthony Hyde, Commissioner

By:_____
Earl Fisher, Commissioner

Date:_____

Approved as to form by

By:_____
Office of County Counsel

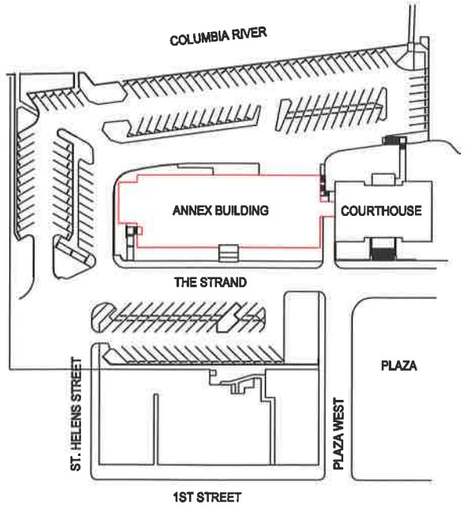

SITE PLAN

SCALE: NTS

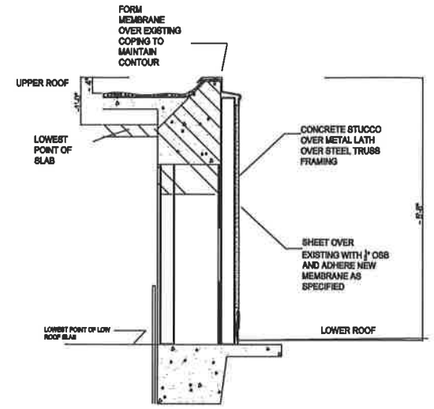

PARAPET WALL DETAIL

SCALE: NTS

LEGEND / NOTES

- EXISTING ROOF TOP EQUIPMENT (VARIOUS SIZES)
- EXISTING VENT (VARIOUS SIZES)
- EXISTING ROOF DRAIN
- EXISTING WALL VENT WITH LOUVERS (VARIOUS SIZES)
- REMOVE — EXISTING TO BE REMOVED BY CONTRACTOR
- CONTRACTOR PROVIDE/INSTALL WALKWAY

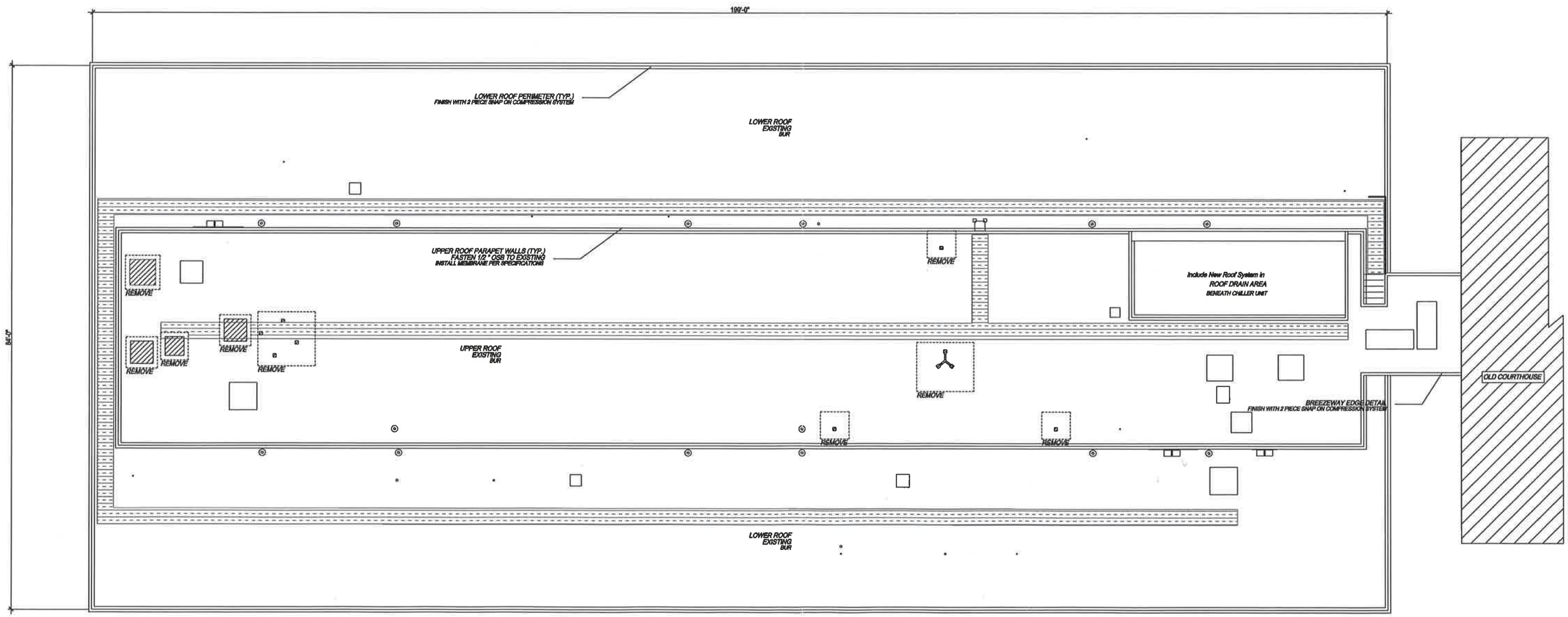

3. ANNEX ROOF AS-BUILT

SCALE: 1/16" = 1'-0"

DEPARTMENT OF LAND DEVELOPMENT SERVICES
Columbia County Courthouse, 230 Strand Street
St. Helens, Oregon 97051
Phone: (503)397-7213 Fax: (503)366-3902
Casey.Garrett@co.columbia.or.us

COLUMBIA COUNTY
1854
OREGON

DATE: May 12, 2015

TO: Prospective Bidders for Courthouse Annex Roof Project

FROM: Casey Garrett, Facilities Services Manager

RE: **ITB FOR COURTHOUSE ANNEX ROOF PROJECT**
Responses to Questions Raised At Pre-Bid Meeting: MAY 8TH, 2015
Addenda and Clarification To The Invitation to Bid

This memorandum includes responses to prospective bidders for the Courthouse Annex Roof project in Columbia County, Oregon to questions and issues raised at the mandatory pre-bid meeting held on May 8th, 2015. Responses contained in this memorandum are intended to address most questions and issues raised orally in the May 8th, 2015 pre-bid meeting but are not intended to be all inclusive of questions asked, issues raised or information requested in the pre-bid meeting.

ITB Ref.	FOR THE RE-ROOFING OF THE COLUMBIA COUNTY COURTHOUSE ANNEX BUILDING
ITB **OREGON BID BOND** **PG. 19**	**CLARIFICATION**: The Bid Bond must be submitted with the bid. The performance bond should be submitted by selected contractor at time of contract.

ITB **4.5.5**	***Question***: Is IB Roof Systems a prequalified manufacturer? ***Answer***: No. If bidder proposes to furnish material which is not prequalified they must follow the instructions provided on page 5 of the ITB.
ITB **ATTACHMENT** **"B"** **Pg. 7**	***Question*:** Is the membrane color on the parapet wall specified? ***Answer***: No. The color will be determined with the selected contractor.
ITB **Pg. 3**	***Question*:** What is the deadline for questions and clarification? ***Answer***: May 15th, 2015

ITB	***Question*:** Is the existing roof slope structural? ***Answer***: Yes. The concrete roof deck under the existing BUR system is sloped.
ITB **ATTACHMENT** **"B"**	***Question*:** How should the sheathing be secured to the parapet wall? ***Answer***: Secure sheathing on parapet wall with low-rise foam adhesive using a 6" ribbon pattern between sheathing and existing wall surface and no less than 26 each #15 heavy duty fasteners. Approved adhesive manufacturers are OMG Olybond, Millenium, Insta Stick or equivalent. Installer shall verify adhesive type is compatible with existing wall surface material.
ITB **ATTACHMENT** **"B"**	***Question*:** Is a fully adhered, fleece-back membrane system an approved alternate? ***Answer*:** No
ITB **ATTACHMENT** **"B"**	***Question*:** Does ponding water after finished installation affect the warranty? ***Answer***: No. See page Attachment "B" page 4 for Warranty specifications
ITB **ATTACHMENT** **"B"**	***Question:*** Is the "Chiller Well" area part of the re-roof project? ***Answer:*** Yes. Include new membrane system over roof below chiller.
ITB	***Question:*** Where can the contractor set up the crane and stage a dumpster and materials? What is the roof height from the designated crane area? ***Answer***: See attached, modified As-Built plan for designated crane and staging areas. The roof height from the crane area is approximately 42 feet.
ITB **ATTACHMENT** **"B"**	***Additional Clarification:*** See attached, modified As-Built plan for additional detail and clarification.
ITB **ATTACHMENT** **"B"**	***ADDENDUM*** Provide and install 3 ½" nailer along perimeters where 2-piece compression system is specified. Increase size of 2-piece compression edge metal to 8".

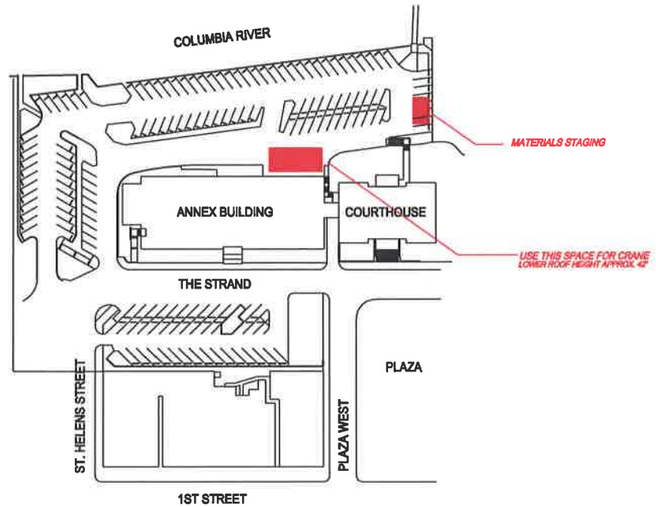

SITE PLAN

SCALE: NTS

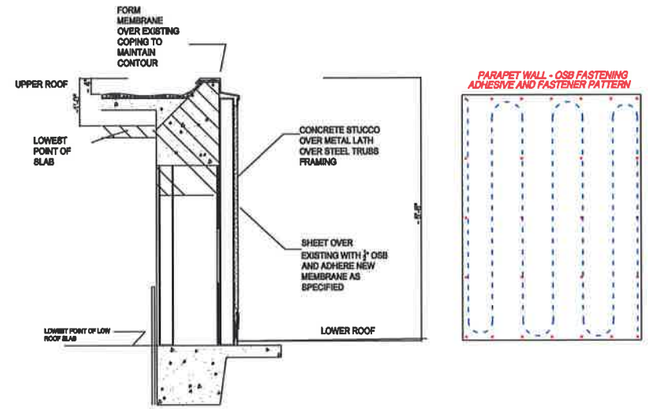

PARAPET WALL DETAIL

SCALE: NTS

LEGEND / NOTES

- EXISTING ROOF TOP EQUIPMENT (VARIOUS SIZES)
- EXISTING VENT (VARIOUS SIZES)
- EXISTING ROOF DRAIN
- EXISTING WALL VENT WITH LOUVERS (VARIOUS SIZES)
- REMOVE — EXISTING TO BE REMOVED BY CONTRACTOR
- CONTRACTOR PROVIDE/INSTALL WALKWAY

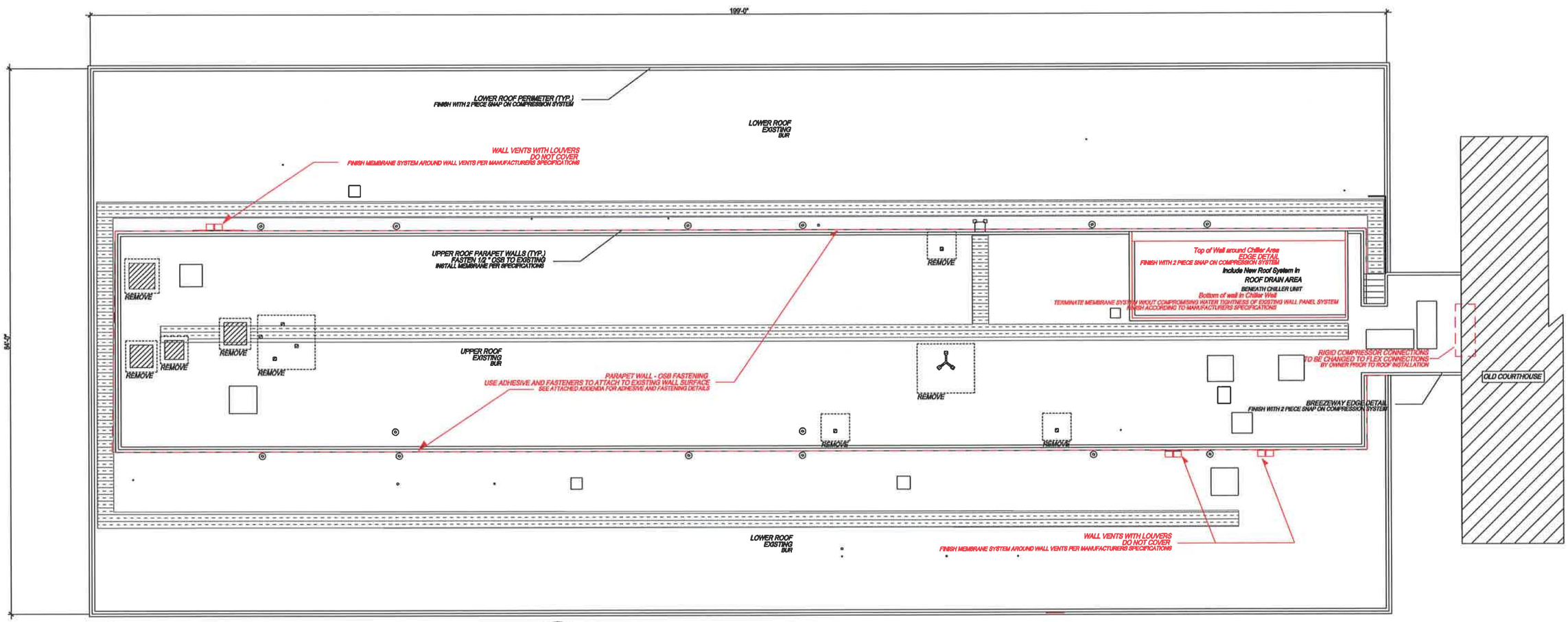

3. ANNEX ROOF AS-BUILT

SCALE: 1/16" = 1'-0"

DEPARTMENT OF LAND DEVELOPMENT SERVICES
Columbia County Courthouse, 230 Strand Street
St. Helens, Oregon 97051
Phone: (503)397-7213 Fax: (503)366-3902
Casey.Garrett@co.columbia.or.us

DATE: May 18, 2015

TO: Prospective Bidders for Courthouse Annex Roof Project

FROM: Casey Garrett, Facilities Services Manager

RE: **ITB FOR COURTHOUSE ANNEX ROOF PROJECT**
Responses to Questions Raised At Pre-Bid Meeting: MAY 8TH, 2015
Addenda and Clarification To The Invitation to Bid

This memorandum includes responses to prospective bidders for the Courthouse Annex Roof project in Columbia County, Oregon to questions and issues raised at the mandatory pre-bid meeting held on May 8th, 2015. Responses contained in this memorandum are intended to address most questions and issues raised orally in the May 8th, 2015 pre-bid meeting but are not intended to be all inclusive of questions asked, issues raised or information requested in the pre-bid meeting.

ITB Ref.	**FOR THE RE-ROOFING OF THE COLUMBIA COUNTY COURTHOUSE ANNEX BUILDING**
ITB Attachment "B" 1.6.C(a)	**Addenda**: Section 1.6 Regulatory Requirements C. Wind Uplift (a.) provides: *1. 1-90* Replace in its entirety with the following: The roof system should be designed in accordance with ASCE 7-10. Design roof system(s) for 115mph wind speeds.

5. BID FORM

COLUMBIA COUNTY COURTHOUSE ROOFING PROJECT

The undersigned and Bidder declare(s), propose(s) and agree(s) as follows:

1. The undersigned has authority to complete and sign this Bid on behalf of the person, firm, business or corporation named herein as Bidder.

2. The full legal name(s) of the Bidder is Kurt Allen Wojahn

3. The only persons, firms, businesses or corporations interested in this Bid as principals are named as Bidders above or as officers, partners, joint venturers or parties below.

4. This Bid is made without collusion with any person, firm, business or corporation other than those named herein.

5. The Bidder has carefully examined all Procurement Documents (including, but not limited to, the Description of the Project, Instructions to Bidders, Bid Form, First-Tier Subcontractor Disclosure Form, Sample Contract, Special Provisions, Specifications, Oregon Bid Bond, Oregon Performance and Payment Bonds, Drawings and Davis Bacon/Oregon Prevailing Wage Rates), and the site(s) of the proposed work.

6. ADDENDA ACKNOWLEDGEMENT (1) the County reserves the right to make changes to the Invitation to Bid and the resulting Contract, by written Addenda, prior to the closing time and date. Addenda will be sent to all prospective bidders via email and posted on the County's website. The COUNTY is not responsible for a bidder's failure to receive notice of Addenda if such are advertised in the foregoing manner. Addenda shall only be issued by the COUNTY and upon issuance are incorporated into the Invitation to Bid or the resulting Contract. If required by the Addendum, Bidders shall sign and return the Addendum prior to the Closing time/date.

By Bidder's signature on this Bid Form Bidder ACKNOWLEDGES, AGREES and CERTIFIES TO THE FOLLOWING:

(a) If any Addenda are issued in connection with this ITB, Bidder has received and duly considered such Addenda, and has completed the blanks below identifying all Addenda issued, and acknowledging and agreeing to the terms of all such Addenda as those terms revise the terms, conditions, Plans and Specifications of the Procurement Documents.

ADDENDA: No. 3 to No. 19 inclusive.

(b) IN ADDITION to completing the blanks above to identify all Addenda, if any, issued under this ITB, Bidder assigned and returned any Addendum that states that it must be signed and returned.

7. Bidder understands and agrees that this Bid is subject to all of the terms and conditions of the Procurement Documents, and any addenda thereto, and the same are incorporated herein by this reference.

8. If this Bid is accepted, Bidder will:

a) execute the Contract prepared by the Office of County Counsel and made ready for signature, with Columbia County;

b) provide the performance security, if any, specified in the Contract Documents;

c) provide all the necessary labor, machinery, tools, apparatus and other means of construction to do all the work required;

d) furnish all the materials necessary; and

e) do all of the foregoing in the manner and time prescribed in, and according to the requirements set forth in, the Contract Documents.

9. If this Bid is accepted and the Bidder fails to or neglects to execute and return the Contract, prepared and ready for execution, and provide performance and payment security, if required, together with all other required documentation, within ten (10) days from the date of mailing by the County or receipt by the Bidder, whichever is sooner, the County may, at its option, determine that the bidder has abandoned the Contract, declare the bid security described in the Procurement Documents, if any, forfeited, and award the Contract to the next lowest responsible bidder.

10. Bidder will make all the payments to workers, suppliers and agencies required under the Contract in the manner described in the Contract Documents; Bidder will comply with all other applicable provisions of Oregon Law, Columbia County Ordinances and rules relating to public contracting including the provisions of ORS 279C.840 and the Davis Bacon Act (40 U.S.C 3141 to 3148).

11. The Bidder by whom this Bid is submitted, and by whom the contract will be entered into in case award is made to the bidder, is a(n):

Individual / sole proprietorship / ~~partnership~~ / ~~corporation~~ / ~~other~~_____

(strike out all but correct title).

12. The names, addresses, titles and phone numbers of the president, secretary - treasurer and manager of the bidding corporation or names, addresses, titles and phone numbers of all officers, partners, joint venturers or other parties interested in this Bid are as follows:

(a) Name: Kurt A Wojahn Title: Owner

Address: 52055 Rabinsky Rd PO Box 672 Scappoose OR 97056

Phone: 503 543 3199

(b) Name: _____ Title: _____

Address: _____

Phone: _____

(c) Name: _____ Title: _____

Address: _____

Phone: _____

(Attach additional sheets if necessary.)

13. The undersigned Bidder certifies that Bidder has not discriminated and will not discriminate against minority, women, or emerging small business enterprises, or a business enterprise that is owned or controlled

by or that employs a disabled veteran in obtaining any required subcontracts. Failure of a Bidder not to so discriminate shall be grounds for disqualification.

14. The undersigned Bidder certifies that Bidder (is / is not) a resident bidder as defined in ORS 279A.120. (Mark out the incorrect certification).

15. The Bidder's Base Bid and Alternates to include all work described in this Procurement Documents, including but not limited to the, Plans, Specifications, sample contract and any issued Addenda:

BASE BID – LUMP SUM: $ 178,552.00

16. CCB REQUIREMENTS

(a) Bidder shall be licensed with the State of Oregon Construction Contractors Board (CCB) prior to bidding on Public Improvement Contract(s). FAILURE TO COMPLY WITH THIS REQUIREMENT SHALL RESULT IN BID REJECTION.

(b) All subcontractors participating in the project shall be similarly registered with the Construction Contractors Board at the time they propose to engage in subcontract work. The CCB registration requirements apply to all public works contracts unless superseded by federal law.

17. Bidder SHALL provide its Construction Contractors Board (ORS 701.055) registration number below:

CONSTRUCTION CONTRACTORS BOARD REGISTRATION NO.: 31528

EXPIRATION DATE OF CCB NO.: 7/30/2015

18. JOINT VENTURE/PARTNERSHIP DISCLOSURE

The Bidder shall disclose whether the bid is submitted by either a partnership or joint venture.

NO: ✓ YES: _____

If yes, the Bidder shall provide the name of the contact person for the partnership or joint venturer.

DATED: 5-29-15

BIDDER: Kurt A Wojahn Wojahn Roofing
(Business Name)

BUSINESS ADDRESS: _____

BY: Kurt A Wojahn
(Signature of Authorized Representative)

Name: Kurt A Wojahn
(Printed Name of Signator)

Title: Owner

Phone: 503 543 3199 Fax: 503 543 4688

BY: Kurt A. Wojahn
(Signature of Second Representative if required)

Name: Kurt A Wojahn
(Printed Name of Signator)

Title: Owner

Federal Tax I.D. No.: 26-0093710

(Unless indicated otherwise below, all business communications regarding this Bid and Contract will be made to the business address and phone number shown above.)

If other than above, all communications should be made to:

Alternate Address:
Phone: 503 543-3199

WOJAHN ROOFING CO,

52055 Rabinsky Rd... **P.O.BOX 672 SCAPPOOSE, OR. 97056 CCB. LIC: 31528**

PH: (503) 543-3199 FAX; 543-4688 www.wojahnroofing.com email: wojahn@wojahnroofing.com

May 28, 2015

PROPOSAL & CONTRACT

Columbia County Courthouse
230Strand Str.
St Helens Or. 97051

RE: Annex Roof:

Wojahn Roofing proposes to furnish all materials and perform the following:

Wojahn Roofing will provide a Crain to remove existing Antennas & Ballast from Roof

Fasten down duro-last fanfold duro-fold crush over existing Roof.

Mechanically attach Duro-Last 50mill. Duro-tuff prefabricated roof system to concrete deck.

Per Duro-Last specification ASCE-7-10 wind calculation

Install all new Duro-last stack flashings and vents. Install custom curbs.

Install ½' cdx 5ply plywood at wall, install fanfold plus iso board for cricket.

Install new prepainted Duro-Last prefabricated Metal 90#system at parapet walls

As to work with existing cap metal. Install Duro-Last roofing up& over outside wall.

This Roof system is installed as to Duro-Last specification.

Clean up and remove all roofing debris.

(Not responsible for Satellite dishes or antenna recalibration)
Duro-Last warranty-guarantee is 20yrs
Wojahn Roofing guarantees all work performed.

The above work equals the sum of $178,552.00 payments to be made as follows.
Upon completion of all work performed.

(Owner is responsible for all bldg. permits required.)

ADDITIONAL TERMS AND CONDITIONS:
ANY ALTERATION FROM THE ABOVE SPECIFICATIONS INVOLVING EXTRA COST OF MATERIAL OR LABORER MODIFICATION, CHANGE, DELETION OR AMENDMENT TO THIS AGREEMENT WILL BE EFFECTIVE AND BINDING ONLY UPON WRITTEN AGREEMENT EXECUTED BY THE PARTIES HERETO, AND WILL CONSTITUTE AN EXTRA CHARGE OVER THE ABOVE TOTAL.
IN THE EVENT OF THIS BREACH OF AGREEMENT, THE PREVAILING PARTY SHALL BE ENTITLED TO REIMBURSEMENT FROM THE OTHER PARTY OF ALL REASONABLE COST AND EXPENSES, INCLUDING WITHOUT LIMITATION, Attorney FEES, whether INCURRED AS THE RESULT OF ARBITRATION, SUIT, ACTION, OR THE SETTLEMENT THEREOF, OR OTHERWISE. THE PARTIES FURTHER AGREE THAT ALL DISPUTES WILL BE RESOLVED IN GOOD FAITH.

AGREED this day of 2015

Customer:

EXHIBIT B

DURO LAST — THE WORLD'S BEST ROOF

ASCE 7 - 10 WIND CALCULATIONS FOR ROOFS

Project Number: PN-7686

Job Name:	Columbia County Courthouse - Annex Bldg	**Contractor:**	Tunney, Jeremy
Address:	230 Strand St.	**Address:**	
City:	St. Helens	**State:**	OR
Section:		**Fax/E-Mail:**	

Roof Dimensions (ft): 83 x 199

Building Height (ft): 20

Min. Parapet Wall Height (in): 36 +

Deck Type: Concrete

Avg. Pullout Resistance(lbs): 450 [X] =Contractor Estimated

If estimated, verify and sign for these calcs to be permitted

Fastener Type: Concrete Screws

Tab Spacings: 1. 60 2. 60 3. 28

Insulation Board Size: 4 x 50 **Fstnrs/Bd:** 16

Strength Design: ASD

Membrane Enhancement Per RAS137 [ ]

Insulation Attachment Per RAS117 [ ]

Basic Velocity Pressure:

Enclosed

Exposure C

Risk Category III & IV

Basic Wind Speed (mph): 179.96

Enhanced Perimeter Width (ft): 8.00

Perimeter enhancement is figured using either 40% of the building height or 10% of the shortest overall building dimension, whichever is less. Minimum value is 5'-0"

Re-Cover

Constant	Kz	Kzt	Kd	V2		=	Qz
0.00256	Velocity Pressure Coefficient	Wind Speed Coefficient	Wind Directionality Factor	Basic Wind Speed - Squared			Lbs/SqFt
0.00256	0.902	1	0.85	32385.60			63.56

Zone 1 Attachment

Membrane Fastening	Tab Spacing (ft):	5.00	Fastener Spacing OC (in):	12	SqFt/Fstnr: 5.00
Insulation Fastening	Board SqFt:	200	Fasteners Per Board:	16	SqFt/Fstnr: 12.50
Zone Coefficient:	-0.71	System Type:	Mechanically Attached - 3" Tabs		
Zone Velocity Pressure:	-45.00	Attachment:	60" Laps Fastened 12" On Center		
Safety Pressure:	90.00	Fasteners:	Cleat Plates - Concrete Screws		
Design Pressure:	90.00	Insulation Attachment	4x50 Board fastened at 16 Fasteners/board		

Notes:

Zone 2 Attachment

Membrane Fastening	Tab Spacing (ft):	5.00	Fastener Spacing OC (in):	6	SqFt/Fstnr: 2.50
Insulation Fastening	Board SqFt:	200	Fasteners Per Board:	16	SqFt/Fstnr: 12.50
Zone Coefficient:	-1.19	System Type:	Mechanically Attached - 3" Tabs		
Zone Velocity Pressure:	-75.51	Attachment:	60" Laps Fastened 6" On Center		
Safety Pressure:	151.01	Fasteners:	Cleat Plates - Concrete Screws		
Design Pressure:	180.00	Insulation Attachment	4x50 Board fastened at 16 Fasteners/board		

Notes:

Zone 3 Attachment

Membrane Fastening	Tab Spacing (ft):	2.33	Fastener Spacing OC (in):	15	SqFt/Fstnr: 2.92
Insulation Fastening	Board SqFt:	200	Fasteners Per Board:	16	SqFt/Fstnr: 12.50
Zone Coefficient:	-1.19	System Type:	Mechanically Attached - 3" Tabs		
Zone Velocity Pressure:	-75.51	Attachment:	28" Laps Fastened 9" On Center		
Safety Pressure:	151.01	Fasteners:	Cleat Plates - Concrete Screws		
Design Pressure:	154.29	Insulation Attachment	4x50 Board fastened at 16 Fasteners/board		

Notes:

ZONES

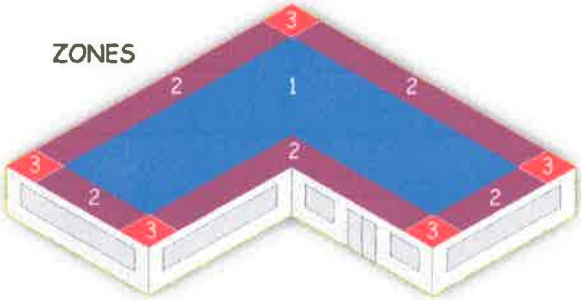

These calculations have been done in accordance with ASCE 7 (05 or 10) standards. However, these calculations do not take precedence over local building codes. All calculations on this report are based on information provided by the contractor. Calculations can not be relied upon should any of the information provided prove incorrect.

Compliant With:

System Design Pressure (-PSF): Lbs per SqFt (PSF)

Lap Spacing: 60 Fastener Spacing: 12

Notes:

Building height estimated. Designed to 90# System.

DO NOT ORDER UNTIL BUILDING PERMIT IS OBTAINED

Done By: Ken Werle

Date: 5/16/2015

Engineer Stamp (if required)

EXHIBIT B - CONTRACTOR'S BID

/16/201510:50 AM

WOJAHN ROOFING CO. PROJECTS **EXHIBIT B**

6-20-2012

Swimming Pool Seaside Or.
1140 BROADWAY ST. SEASIDE OR. 97138 DURO-LAST SQ.FT. 8433

SUNSET EMPIRE PARKS & REC. DISTRICT
Craig Kennedy
503-738-3311
crgkennedy@gmail.com]

9-18-2014

OREGON TRAIL LANES
735 S. COLUMBIA RIVER HWY. ST. HELENS DURO-LAST SQ.FT. 12766

KRAFT ENTERPRICE
LORI KRAFT
503-397-1011
otlbowl@opusnet.com

4-04-2114 & 5-13-2115

Arrow Smith Apartments
2415 COL. BLVD. ST.HELENS, OR. 97051 DURO-LAST SQ.FT. 6222

Regency Management, Inc
503-644-5251
Bob Clark
bobclark99@gmail.com

5-13-2013

VERNONIA OLD TOWN THEATER
716 BRIDGE ST VERNONIA OR.97064 DURO-LAST SQ.FT. 8996

LOREN STELZENMUELLER & GRETCHEN JOHNSTON
503-366-2943
lorens@pacifier.com

WOJAHN ROOFING CO.
52055 RABINSKY RD. SCAPPOOSE OR. 97056 phone 503 -543-3199
OR: LIC 31528 www.wojahnroofing.com email: **wojahn@wojahnroofing.com**

REFERENCE LIST OF DURO-LAST JOB

OLD TOWN THEATER 716 BRIDGE RD. VERNONIA OR. 97064

SUNSET PARK COMMUNITY CHURCH 174 SUNSET BLVD. ST. HELENS OR.

WESTSIDE GROCERY 305 N. 7TH. ST. HELENS, OR.

OREGON TRAIL LANES 735 S. COLUMBIA RIVER HWY. ST. HELENS OR.

THE CINNAMON TREE RON STILL: 503- 396-0708

MEADOW PARK HEALTH&SPECIALITY CARE CENTER 75 SHORE DR. ST. HELENS

SEASIDE CONVENTION CENTER: SEASIDE ORE. # 503-738-5112

SEASIDE FIRE DISTRICT: #503-738-5112

SCAPPOOSE CITY HALL: #503-543-7146

ST. HELENS RURAL FIRE DISTRICT: # 503-397-2990

RED APPLE MARKET ST. HELENS: # 503-397-2288

EMPIRE REALTY JAMES DIAS: #503-397-5556

MOOSE LODGE #591 57317 OLD PORTLAND RD. WARREN 503-397-5354

WINDEMERE REALTY: HAFEMAN 51919 N COL. BLVD. SCAPPOOSE, 3 503-543-6344

GRAYMONT WESTERN PCC PLANT (BOISE CASCADE) 1400 KASTER RD. ST HELENS

FIRST CHRISTIAN CHURCH: 185 S. 12TH. ST HELENS # 503-397-2151

ST FREDERIC CHURCH: 175 S. 13TH. ST HELENS # 503-397-0148

ST.WENCESLAUS PARISH HALL 51555 OLD PORTLAND RD. SCAPPOOSE

CITY OF ST HELENS MARC KNUDSEN 503-397-3532

THE SOOT BUSTER: STEVE : 1370 COLUMBIA BLVD ST HELENS 503-397-0390

ECONO INN: CASCADE LOCKS # 541-374-8417

PORTLAND HABILITATION CENTER S.E 74TH. WINSTAD: # 503-777-2215

SURFRIDER MOTEL. DEPOE BAY JOHN EGNER: # 541-764-2311

HVAC INC. ODOT CLACKAMAS ORE. BILL HEWES: # 503-239-4822

BOB LUCAS: 29755 RIVERVIEW DR. RAINIER # 503-556-3741

Form **W-9**
(Rev. December 2014)
Department of the Treasury
Internal Revenue Service

Request for Taxpayer Identification Number and Certification

Give Form to the requester. Do not send to the IRS.

Print or type
See Specific Instructions on page 2.

1 Name (as shown on your income tax return). Name is required on this line; do not leave this line blank.
KURT A. WOJAHN

2 Business name/disregarded entity name, if different from above
WOJAHN ROOFING CO,

3 Check appropriate box for federal tax classification; check only one of the following seven boxes:
☑ Individual/sole proprietor or single-member LLC ☐ C Corporation ☐ S Corporation ☐ Partnership ☐ Trust/estate
☐ Limited liability company. Enter the tax classification (C=C corporation, S=S corporation, P=partnership) ▶
Note. For a single-member LLC that is disregarded, do not check LLC; check the appropriate box in the line above for the tax classification of the single-member owner.
☐ Other (see instructions) ▶

4 Exemptions (codes apply only to certain entities, not individuals; see instructions on page 3):
Exempt payee code (if any)
Exemption from FATCA reporting code (if any)
(Applies to accounts maintained outside the U.S.)

5 Address (number, street, and apt. or suite no.)
52055 RABIBSKY RD PO BOX 672

Requester's name and address (optional)

6 City, state, and ZIP code
SCAPPOOSE OR 97056

7 List account number(s) here (optional)

Part I Taxpayer Identification Number (TIN)

Enter your TIN in the appropriate box. The TIN provided must match the name given on line 1 to avoid backup withholding. For individuals, this is generally your social security number (SSN). However, for a resident alien, sole proprietor, or disregarded entity, see the Part I instructions on page 3. For other entities, it is your employer identification number (EIN). If you do not have a number, see *How to get a TIN* on page 3.

Note. If the account is in more than one name, see the instructions for line 1 and the chart on page 4 for guidelines on whose number to enter.

Social security number
5 4 3 – 6 4 – 2 0 7 4

or

Employer identification number
2 6 – 0 0 9 3 7 1 0

Part II Certification

Under penalties of perjury, I certify that:

1. The number shown on this form is my correct taxpayer identification number (or I am waiting for a number to be issued to me); and
2. I am not subject to backup withholding because: (a) I am exempt from backup withholding, or (b) I have not been notified by the Internal Revenue Service (IRS) that I am subject to backup withholding as a result of a failure to report all interest or dividends, or (c) the IRS has notified me that I am no longer subject to backup withholding; and
3. I am a U.S. citizen or other U.S. person (defined below); and
4. The FATCA code(s) entered on this form (if any) indicating that I am exempt from FATCA reporting is correct.

Certification instructions. You must cross out item 2 above if you have been notified by the IRS that you are currently subject to backup withholding because you have failed to report all interest and dividends on your tax return. For real estate transactions, item 2 does not apply. For mortgage interest paid, acquisition or abandonment of secured property, cancellation of debt, contributions to an individual retirement arrangement (IRA), and generally, payments other than interest and dividends, you are not required to sign the certification, but you must provide your correct TIN. See the instructions on page 3.

Sign Here **Signature of U.S. person ▶** Kurt A. Woj **Date ▶** 5-29-15

General Instructions

Section references are to the Internal Revenue Code unless otherwise noted.

Future developments. Information about developments affecting Form W-9 (such as legislation enacted after we release it) is at *www.irs.gov/fw9*.

Purpose of Form

An individual or entity (Form W-9 requester) who is required to file an information return with the IRS must obtain your correct taxpayer identification number (TIN) which may be your social security number (SSN), individual taxpayer identification number (ITIN), adoption taxpayer identification number (ATIN), or employer identification number (EIN), to report on an information return the amount paid to you, or other amount reportable on an information return. Examples of information returns include, but are not limited to, the following:

- Form 1099-INT (interest earned or paid)
- Form 1099-DIV (dividends, including those from stocks or mutual funds)
- Form 1099-MISC (various types of income, prizes, awards, or gross proceeds)
- Form 1099-B (stock or mutual fund sales and certain other transactions by brokers)
- Form 1099-S (proceeds from real estate transactions)
- Form 1099-K (merchant card and third party network transactions)
- Form 1098 (home mortgage interest), 1098-E (student loan interest), 1098-T (tuition)
- Form 1099-C (canceled debt)
- Form 1099-A (acquisition or abandonment of secured property)

Use Form W-9 only if you are a U.S. person (including a resident alien), to provide your correct TIN.

If you do not return Form W-9 to the requester with a TIN, you might be subject to backup withholding. See *What is backup withholding?* on page 2.

By signing the filled-out form, you:

1. Certify that the TIN you are giving is correct (or you are waiting for a number to be issued),
2. Certify that you are not subject to backup withholding, or
3. Claim exemption from backup withholding if you are a U.S. exempt payee. If applicable, you are also certifying that as a U.S. person, your allocable share of any partnership income from a U.S. trade or business is not subject to the withholding tax on foreign partners' share of effectively connected income, and
4. Certify that FATCA code(s) entered on this form (if any) indicating that you are exempt from the FATCA reporting, is correct. See *What is FATCA reporting?* on page 2 for further information.

Cat. No. 10231X Form **W-9** (Rev. 12-2014)

ACORD®

CERTIFICATE OF LIABILITY INSURANCE

DATE (MM/DD/YYYY)

THIS CERTIFICATE IS ISSUED AS A MATTER OF INFORMATION ONLY AND CONFERS NO RIGHTS UPON THE CERTIFICATE HOLDER. THIS CERTIFICATE DOES NOT AFFIRMATIVELY OR NEGATIVELY AMEND, EXTEND OR ALTER THE COVERAGE AFFORDED BY THE POLICIES BELOW. THIS CERTIFICATE OF INSURANCE DOES NOT CONSTITUTE A CONTRACT BETWEEN THE ISSUING INSURER(S), AUTHORIZED REPRESENTATIVE OR PRODUCER, AND THE CERTIFICATE HOLDER.

IMPORTANT: If the certificate holder is an ADDITIONAL INSURED, the policy(ies) must be endorsed. If SUBROGATION IS WAIVED, subject to the terms and conditions of the policy, certain policies may require an endorsement. A statement on this certificate does not confer rights to the certificate holder in lieu of such endorsement(s).

PRODUCER

Ashton Agency, Inc.
7505 NE Ambassador Place
Suite A
Portland, OR 97220

CONTACT NAME: Sue Mooney
PHONE (A/C, No, Ext): (800) 452-2663 FAX (A/C, No): (503) 253-1353
E-MAIL ADDRESS: smooney@ashtonagency.com

INSURER(S) AFFORDING COVERAGE	NAIC #
INSURER A: Arch Specialty Insurance	21199
INSURER B:	
INSURER C:	
INSURER D:	
INSURER E:	
INSURER F:	

INSURED

Kurt A Wojahn Kurt A. Wojahn
52055 Rabinsky Rd
Scappoose, OR 97056

COVERAGES **CERTIFICATE NUMBER:** **REVISION NUMBER:**

THIS IS TO CERTIFY THAT THE POLICIES OF INSURANCE LISTED BELOW HAVE BEEN ISSUED TO THE INSURED NAMED ABOVE FOR THE POLICY PERIOD INDICATED. NOTWITHSTANDING ANY REQUIREMENT, TERM OR CONDITION OF ANY CONTRACT OR OTHER DOCUMENT WITH RESPECT TO WHICH THIS CERTIFICATE MAY BE ISSUED OR MAY PERTAIN, THE INSURANCE AFFORDED BY THE POLICIES DESCRIBED HEREIN IS SUBJECT TO ALL THE TERMS, EXCLUSIONS AND CONDITIONS OF SUCH POLICIES. LIMITS SHOWN MAY HAVE BEEN REDUCED BY PAID CLAIMS.

INSR LTR	TYPE OF INSURANCE	ADDL INSD	SUBR WVD	POLICY NUMBER	POLICY EFF (MM/DD/YYYY)	POLICY EXP (MM/DD/YYYY)	LIMITS	
	✓ COMMERCIAL GENERAL LIABILITY						EACH OCCURRENCE	$ 2,000,000
	☐ CLAIMS-MADE ☑ OCCUR						DAMAGE TO RENTED PREMISES (Ea occurrence)	$ 150,000
							MED EXP (Any one person)	$ 10,000
				AGL0026030-00	05/25/15	05/25/16	PERSONAL & ADV INJURY	$ 2,000,000
	GEN'L AGGREGATE LIMIT APPLIES PER:						GENERAL AGGREGATE	$ 2,000,000
	✓ POLICY ☐ PRO-JECT ☐ LOC						PRODUCTS - COMP/OP AGG	$ 2,000,000
	OTHER:							$
	AUTOMOBILE LIABILITY						COMBINED SINGLE LIMIT (Ea accident)	$
	ANY AUTO						BODILY INJURY (Per person)	$
	ALL OWNED AUTOS / SCHEDULED AUTOS						BODILY INJURY (Per accident)	$
	HIRED AUTOS / NON-OWNED AUTOS						PROPERTY DAMAGE (Per accident)	$
								$
	UMBRELLA LIAB / OCCUR						EACH OCCURRENCE	$ 0
	EXCESS LIAB / CLAIMS-MADE						AGGREGATE	$ 0
	DED / RETENTION $							$
	WORKERS COMPENSATION AND EMPLOYERS' LIABILITY						PER STATUTE / OTH-ER	
	ANY PROPRIETOR/PARTNER/EXECUTIVE OFFICER/MEMBER EXCLUDED? Y/N ☐ N/A (Mandatory in NH)						E.L. EACH ACCIDENT	$
	If yes, describe under DESCRIPTION OF OPERATIONS below						E.L. DISEASE - EA EMPLOYEE	$
							E.L. DISEASE - POLICY LIMIT	$

DESCRIPTION OF OPERATIONS / LOCATIONS / VEHICLES (ACORD 101, Additional Remarks Schedule, may be attached if more space is required)

COLUMBIA COUNTY COURTHOUSE
IS RECOGNIZED AS ADDITIONAL INSURED

CERTIFICATE HOLDER

COLUMBIA COUNTY COURTHOUSE
230 STRAND
ST HELENS OR 97051

CANCELLATION

SHOULD ANY OF THE ABOVE DESCRIBED POLICIES BE CANCELLED BEFORE THE EXPIRATION DATE THEREOF, NOTICE WILL BE DELIVERED IN ACCORDANCE WITH THE POLICY PROVISIONS.

AUTHORIZED REPRESENTATIVE

Sue Mooney

© 1988-2014 ACORD CORPORATION. All rights reserved.

7. OREGON BID BOND

BOND NO. 71666888

AMOUNT: $ 10% of amount bid

KNOW ALL MEN BY THESE PRESENTS, that Kurt A. Wojahn hereinafter called the PRINCIPAL, and WESTERN SURETY COMPANY a corporation duly organized under the laws of the State of SD, having its principal place of business at 333 S. Wabash Ave., 41st Floor, Chicago, in the State of IL and authorized to do business in the State of Oregon, as SURETY, are held and firmly bound unto Columbia County hereinafter called the OBLIGEE, in the sum of 10% of amount bid DOLLARS ($ 10% of amount bid), for the payment of which we bind ourselves, our heirs, executors, administrators, successors, and assigns, jointly and severally, firmly by these presents.

THE CONDITION OF THIS BOND IS SUCH THAT:

WHEREAS, the PRINCIPAL is herewith submitting his or its Bid Proposal for the Columbia County Courthouse Roofing Project, said Bid Proposal, by reference thereto, being hereby made a part hereof.

NOW, THEREFORE, if the Bid Proposal submitted by the PRINCIPAL is accepted, and the Contract awarded to the PRINCIPAL, and if the PRINCIPAL shall execute the proposed Contract and shall furnish such Performance and Payment Bond as required by the Contract Documents within the time fixed by the Documents, then this obligation shall be void, if the PRINCIPAL shall fail to execute the proposed Contract and furnish the bond, the SURETY hereby agrees to pay to the OBLIGEE the said sum as liquidated damages.

Signed and sealed this 28th day of May, 2015.

PRINCIPAL

By KURT A. WOJAHN

WESTERN SURETY COMPANY
SURETY

By [signature]
Attorney-in-Fact

WESTERN SURETY COMPANY CORPORATE SEAL SOUTH DAKOTA

Western Surety Company

POWER OF ATTORNEY - CERTIFIED COPY

Bond No. 71666888

Know All Men By These Presents, that WESTERN SURETY COMPANY, a corporation duly organized and existing under the laws of the State of South Dakota, and having its principal office in Sioux Falls, South Dakota (the "Company"), does by these presents make, constitute and appoint DAVID BYRON HARMS

its true and lawful attorney(s)-in-fact, with full power and authority hereby conferred, to execute, acknowledge and deliver for and on its behalf as Surety, bonds for:

Principal: Kurt A Wojahn

Obligee: County of Columbia

Amount: $500,000.00

and to bind the Company thereby as fully and to the same extent as if such bonds were signed by the Senior Vice President, sealed with the corporate seal of the Company and duly attested by its Secretary, hereby ratifying and confirming all that the said attorney(s)-in-fact may do within the above stated limitations. Said appointment is made under and by authority of the following bylaw of Western Surety Company which remains in full force and effect.

"Section 7. All bonds, policies, undertakings, Powers of Attorney or other obligations of the corporation shall be executed in the corporate name of the Company by the President, Secretary, any Assistant Secretary, Treasurer, or any Vice President or by such other officers as the Board of Directors may authorize. The President, any Vice President, Secretary, any Assistant Secretary, or the Treasurer may appoint Attorneys in Fact or agents who shall have authority to issue bonds, policies, or undertakings in the name of the Company. The corporate seal is not necessary for the validity of any bonds, policies, undertakings, Powers of Attorney or other obligations of the corporation. The signature of any such officer and the corporate seal may be printed by facsimile."

All authority hereby conferred shall expire and terminate, without notice, unless used before midnight of August 28, 2015, but until such time shall be irrevocable and in full force and effect.

In Witness Whereof, Western Surety Company has caused these presents to be signed by its Vice President, Paul T. Bruflat, and its corporate seal to be affixed this 28th day of May, 2015.

WESTERN SURETY COMPANY

Paul T. Bruflat

Paul T. Bruflat, Vice President

WESTERN SURETY COMPANY CORPORATE SEAL SOUTH DAKOTA

STATE OF SOUTH DAKOTA
COUNTY OF MINNEHAHA } ss

On this 28th day of May, in the year 2015, before me, a notary public, personally appeared Paul T. Bruflat, who being to me duly sworn, acknowledged that he signed the above Power of Attorney as the aforesaid officer of WESTERN SURETY COMPANY and acknowledged said instrument to be the voluntary act and deed of said corporation.

S. PETRIK
SEAL NOTARY PUBLIC SOUTH DAKOTA SEAL

S. Petrik

Notary Public - South Dakota

My Commission Expires August 11, 2016

I the undersigned officer of Western Surety Company, a stock corporation of the State of South Dakota, do hereby certify that the attached Power of Attorney is in full force and effect and is irrevocable, and furthermore, that Section 7 of the bylaws of the Company as set forth in the Power of Attorney is now in force.

In testimony whereof, I have hereunto set my hand and seal of Western Surety Company this 28th day of May, 2015.

WESTERN SURETY COMPANY

Paul T. Bruflat

Paul T. Bruflat, Vice President

Form F6306-8-2012

6. FIRST-TIER SUBCONTRACTOR DISCLOSURE FORM.

PROJECT NAME: **Columbia County Courthouse Roofing Project**

BID CLOSING: Date: May 29, 2015 Time: 2:00 p.m. Pacific Time

This form must be submitted at the location specified in the Invitation to Bid on bid closing date and within two working hours after the advertised bid closing.

Instructions for First-Tier Subcontractor Disclosure: Bidders are required to disclose information about certain first-tier subcontractors when the contract value for a Public Improvement is greater than $100,000.00 (see ORS 279C.370). Specifically, when the contract amount of a first-tier subcontractor furnishing labor or labor and materials would be greater than or equal to:

(a) Five (5%) of the project bid, but at least $15,000.00; or
(b) $350,000.00, regardless of the percentage of the total bid.

The disclosure of first-tier subcontractors shall include:

(a) The subcontractor's name;
(b) The category of work that the subcontractor would be performing; and
(c) The dollar value of the subcontract.

If the Bidder will not be using any subcontractors that are subject to the above disclosure requirements, the Bidder is required to indicate "None" on the form, below. THE COUNTY MUST REJECT A BID IF THE BIDDER FAILS TO SUBMIT THE DISCLOSURE FORM WITH THIS INFORMATION BY THE STATED DEADLINE (See OAR 137-049-0360)

List below the name of each subcontractor that will be furnishing labor or will be furnishing labor and materials and that is required to be disclosed, the category of work that the subcontractor will be performing and the dollar value of the subcontract. Enter "NONE" if there are no subcontractors that need to be disclosed. (ATTACH ADDITIONAL SHEETS IF NEEDED.)

NAME	DOLLAR VALUE	CATEGORY OF WORK
1) Professional Quality	$ 95,000	Labor
2)	$	
3)	$	
4)	$	

Failure to submit this form by the disclosure deadline will result in a nonresponsive bid. A nonresponsive bid will not be considered for award.

Form submitted by (bidder name): Kurt A Wojahn Wojahn Roofing

Contact name: Kurt Wojahn

Phone no.: 503-543-3199

STATE OF OREGON

CONSTRUCTION CONTRACTORS BOARD

LICENSE CERTIFICATE

LICENSE NUMBER: 182097

This document certifies that:

PROFESSIONAL QUALITY ROOFING LLC
915 IKE MOONEY ROAD
SILVERTON OR 97381

is licensed in accordance with Oregon Law as a Residential General Contractor and a Commercial General Contractor Level 2.

License Details:
EXPIRATION DATE: 06/09/2016
ENTITY TYPE: Limited Liability Company
INDEP. CONT. STATUS: NONEXEMPT
RESIDENTIAL BOND: $20,000
COMMERCIAL BOND: $20,000
INSURANCE: $1,000,000 / $2,000,000
RMI: FIDEL MONTES HERNANDEZ
HOME INSPECTOR CERTIFIED: NO

ACORD®

CERTIFICATE OF LIABILITY INSURANCE

DATE (MM/DD/YYYY): 05/21/2015

THIS CERTIFICATE IS ISSUED AS A MATTER OF INFORMATION ONLY AND CONFERS NO RIGHTS UPON THE CERTIFICATE HOLDER. THIS CERTIFICATE DOES NOT AFFIRMATIVELY OR NEGATIVELY AMEND, EXTEND OR ALTER THE COVERAGE AFFORDED BY THE POLICIES BELOW. THIS CERTIFICATE OF INSURANCE DOES NOT CONSTITUTE A CONTRACT BETWEEN THE ISSUING INSURER(S), AUTHORIZED REPRESENTATIVE OR PRODUCER, AND THE CERTIFICATE HOLDER.

IMPORTANT: If the certificate holder is an ADDITIONAL INSURED, the policy(ies) must be endorsed. If SUBROGATION IS WAIVED, subject to the terms and conditions of the policy, certain policies may require an endorsement. A statement on this certificate does not confer rights to the certificate holder in lieu of such endorsement(s).

PRODUCER

Antonoff & Co., LLC
6819 Se Foster Rd.
Portland, OR 97206

CONTACT NAME: Elizabeth Osintsev
PHONE (A/C, No, Ext): (503)772-1090 FAX (A/C, No): (503)772-4266
E-MAIL ADDRESS: liz@antonoff.co

INSURER(S) AFFORDING COVERAGE	NAIC #
INSURER A : Preferred Contractors Insurance Co. RRG	
INSURER B :	
INSURER C :	
INSURER D :	
INSURER E :	
INSURER F :	

INSURED

Professional Quality Roofing LLC
915 Ike Mooney Rd
Silverton, OR 97381

COVERAGES CERTIFICATE NUMBER: 00000000-0 REVISION NUMBER: 7

THIS IS TO CERTIFY THAT THE POLICIES OF INSURANCE LISTED BELOW HAVE BEEN ISSUED TO THE INSURED NAMED ABOVE FOR THE POLICY PERIOD INDICATED. NOTWITHSTANDING ANY REQUIREMENT, TERM OR CONDITION OF ANY CONTRACT OR OTHER DOCUMENT WITH RESPECT TO WHICH THIS CERTIFICATE MAY BE ISSUED OR MAY PERTAIN, THE INSURANCE AFFORDED BY THE POLICIES DESCRIBED HEREIN IS SUBJECT TO ALL THE TERMS, EXCLUSIONS AND CONDITIONS OF SUCH POLICIES. LIMITS SHOWN MAY HAVE BEEN REDUCED BY PAID CLAIMS.

INSR LTR	TYPE OF INSURANCE	ADDL INSD	SUBR WVD	POLICY NUMBER	POLICY EFF (MM/DD/YYYY)	POLICY EXP (MM/DD/YYYY)	LIMITS	
A	X COMMERCIAL GENERAL LIABILITY			PC80781-04	10/03/2014	10/03/2015	EACH OCCURRENCE	$ 1,000,000
	CLAIMS-MADE X OCCUR						DAMAGE TO RENTED PREMISES (Ea occurrence)	$ 50,000
							MED EXP (Any one person)	$ 5,000
							PERSONAL & ADV INJURY	$ 1,000,000
	GEN'L AGGREGATE LIMIT APPLIES PER:						GENERAL AGGREGATE	$ 2,000,000
	X POLICY PRO-JECT LOC						PRODUCTS - COMP/OP AGG	$ 2,000,000
	OTHER:							$
	AUTOMOBILE LIABILITY						COMBINED SINGLE LIMIT (Ea accident)	$
	ANY AUTO						BODILY INJURY (Per person)	$
	ALL OWNED AUTOS / SCHEDULED AUTOS						BODILY INJURY (Per accident)	$
	HIRED AUTOS / NON-OWNED AUTOS						PROPERTY DAMAGE (Per accident)	$
								$
	UMBRELLA LIAB / OCCUR						EACH OCCURRENCE	$
	EXCESS LIAB / CLAIMS-MADE						AGGREGATE	$
	DED / RETENTION $							$
	WORKERS COMPENSATION AND EMPLOYERS' LIABILITY						PER STATUTE / OTH-ER	
	ANY PROPRIETOR/PARTNER/EXECUTIVE OFFICER/MEMBER EXCLUDED? (Mandatory in NH) Y/N N/A						E.L. EACH ACCIDENT	$
	If yes, describe under DESCRIPTION OF OPERATIONS below						E.L. DISEASE - EA EMPLOYEE	$
							E.L. DISEASE - POLICY LIMIT	$

DESCRIPTION OF OPERATIONS / LOCATIONS / VEHICLES (ACORD 101, Additional Remarks Schedule, may be attached if more space is required)

Columbia County Courthouse-Annex Bldg is listed as additional insured.

CERTIFICATE HOLDER

Columbia County Courthouse-Annex Bldg
230 Strand St.
Saint Helens, OR 97051

CANCELLATION

SHOULD ANY OF THE ABOVE DESCRIBED POLICIES BE CANCELLED BEFORE THE EXPIRATION DATE THEREOF, NOTICE WILL BE DELIVERED IN ACCORDANCE WITH THE POLICY PROVISIONS.

AUTHORIZED REPRESENTATIVE

(LIZ)

© 1988-2014 ACORD CORPORATION. All rights reserved.

ACORD 25 (2014/01) The ACORD name and logo are registered marks of ACORD

Printed by LIZ on May 21, 2015 at 10:10AM

From: "Fidel Montes" <proquality@live.com>
Subject: Job references
Date: Thu, May 21, 2015 1:36 pm
To: "wojahn" <wojahn@wojahnroofing.com>

I hope this helps.

2014 Summer

Contractor: Alternative Roofing

Job Name and location: Capital Mall 625 Black Lake Blvd SW, Olympia, WA 98502

Description: Layover with 40 mil white Duro-last. 300,000 Sq. ft. 11 ft high parapet walls on north and south side.

May 2015

Contractor: Landmark Roofing and Siding

Job Name and location: Kings Command Foods Inc. 30,000 Sq Ft.

Description: EPDM tear off, cover board removal, 4 inch insulation removal, and 1/2 inch sheet rock removal. Installed vapor barrier. Installed 1 layer of 3.1 iso insulation and 1 layer of 3.5 iso insulation. Installed 1/4 inch dense deck. Installed 60 mil grey Duro-last roofing. Mechanically attached to metal deck.

May 2015

Contractor: Pacific Harbors Roofing

Job Name and location: Memorial Medical Plaza. 500 Lily Road NE, Olympia, WA 98506

Description: Mechanically attached Duro-blue and 40 mil white Duro-last to Concrete deck. Installed 2 piece compression metal for edge detail. 15,000 Sq. Ft.

Thank you
Sincerely,

Fidel Montes
Professional Quality Roofing LLC

WWW.PROQUALITYROOFING.ORG
C: 971.218.5244
F: 503.873.0407
E: proquality@live.com

CCB: 182097
WA: PROFEQR869J8

Attachments:

untitled-[1].plain	
Size:	1.2 k
Type:	text/plain

OREGON DEPARTMENT OF EDUCATION EARLY LEARNING DIVISION 2013-2015
COUNTY HEALTHY FAMILIES OREGON
MEDICAID ADMINISTRATIVE ACTIVITIES
INTERGOVERNMENTAL AGREEMENT #9784 or COL1315 AMENDMENT #1
"HEALTHY START AGREEMENT"

This is Amendment No. 1 to ODE Agreement COL1315, also referred to as ODE Agreement No. 9784 (as amended from time to time, the "Agreement") between the State of Oregon, acting by and through its Department of Education on behalf of its Early Learning Division ("AGENCY) and **Columbia County** ("COUNTY") a political subdivision of the State of Oregon. The Agreement is dated June 20, 2013; this Amendment is effective as of the last date it is signed below (the "Effective Date").

1. This Amendment shall be effective on the last date the Amendment has been signed by every party and when required, approved in accordance with applicable laws, rules and regulations, including any federal approval and approval for legal sufficiency by the State of Oregon, Department of Justice.

2. The Agreement is hereby amended as follows with **new language indicated by underlining** and **[deleted language is indicated by brackets]**:

A) Section 1, "AGREEMENT" is revised as follows:
This Agreement is effective on July 1, 2013, or the date it has been fully executed by every party and, when required, approved by the Oregon Department of Justice. Unless extended or terminated in accordance with its terms, this Agreement terminates on [June 30, 2015] **September 30, 2015.**

Upon execution by each of the parties hereto and approval as required by applicable law, the Agreement shall become effective as of July 1, 2013.

B) Section 3, "CONSIDERATION", subsection B, is revised as follows:
Payment for all Work performed under this Agreement shall be subject to the provisions of ORS 293.462. The maximum, not to exceed amount for the total cost of providing Medicaid administrative activities under this Agreement is [$75,000] **$84,375.** County shall reimburse AGENCY 50% of this amount for the State match portion.

C) Section 3, "CONSIDERATION" subsection G, is revised as follows: COUNTY shall send itemized invoice to the following AGENCY supervising representative:

Attn: [Serena Harris] Erin Deahn
Early Learning Division
[Contracts and Procurement Office] Oregon Department of Education
[775 Court Street NE] 255 Capitol St NE
[Salem, OR 97301] Salem, OR 97310

D) Section 9, "Notice" is revised as follows:
Except as otherwise expressly provided in the Agreement, any communications between the parties hereto or notices to be given hereunder shall be in writing by personal delivery, facsimile, or mailing the same, postage prepaid to COUNTY or AGENCY at the address or number set forth below, or to such other addresses or numbers as either party may indicate pursuant to this section. Any communication or notice so addressed and mailed shall be effective on the fifth calendar day after the date of mailing. Any communication or notice delivered by facsimile will be effective on the day the transmitting machine generates a receipt of the successful transmission, if transmission was during normal business hours of the recipient, or on the next business day, if transmission was outside normal business hours of the recipient. To be effective against AGENCY, any notice transmitted by facsimile must be confirmed by telephone notice to AGENCY's [Office of Contracts and Procurement at (503) 373-1283] Office of Finance and Administration, Procurement Services Unit at (503) 947-5881.

To be effective against County, any notice transmitted by facsimile must be confirmed by telephone notice to COUNTY's Early Learning Division Office. Any communication or notice given by personal delivery shall be effective when actually delivered.

Notices to AGENCY: **Early Learning Division**
[Contracts and Procurement Office] Oregon Department of Education
Office of Finance and Administration
Procurement Services Unit
[775 Court Street NE] 255 Capitol St NE
[Salem, OR 97301] Salem, OR 97310

Notices to COUNTY: **Columbia County CCF**
230 Strand St., Room 301
St. Helens, OR 97051

3. Except as expressly amended above, all other terms and conditions of original Agreement are still in full force and effect. COUNTY certifies that the representations, warranties and certifications contained in the original Agreement are true and correct as of the effective date of this Amendment and with the same effect as though made at the time of this Amendment.

COUNTY, BY EXECUTION OF THIS AMENDMENT, HEREBY ACKNOWLEDGES COUNTY HAS READ THIS AMENDMENT, UNDERSTANDS IT, AND AGREES TO BE BOUND BY ITS TERMS AND CONDITIONS.

COUNTY: YOU WILL NOT BE PAID FOR SERVICES RENDERED PRIOR TO NECESSARY STATE APPROVALS

COUNTY

By:	Title:	Date:
Printed Signature	E-Mail Address:	

AGENCY

Authorized Signature:	Title:	Date:

FAXED OR ELECTRONIC SIGNATURES ARE ACEPTABLE

INTERGOVERNMENTAL AGREEMENT
BETWEEN
COLUMBIA COUNTY, OREGON
AND
CITY OF SCAPPOOSE

1. Purpose.

This agreement is entered into between Columbia County("County") and the City of Scappoose ("City") for the cooperation of units of local government under the authority of ORS 190.110.

This agreement provides the basis for a cooperative working relationship for the purpose of providing supervised Community Justice work crews to perform general labor at sites under the control of the City.

2. Scope of Work and Cooperation.

2.1 City Agrees to:

2.1.1 Identify work crew projects, such as landscape maintenance and grounds maintenance.

2.1.2 Schedule work crew projects on a mutually agreed-upon schedule.

2.2 The County agrees to:

2.2.1 Provide a work crew supervisor to supervisor the work crews;

2.2.2 Provide a minimum of four (4) clients to perform general labor on a mutually agreed-upon schedule. Total hours per crew is a minimum of twenty-four (24) labor hours;

2.2.3 Provide some basic tools to perform work. If special tools are necessary, they shall be provided by the City.

3. Compensation. City agrees to pay $325 per day for the services outlined in Section 2.2. Payments shall be made on the basis for payment submitted as follows:

3.1 County will bill City on the last working day of each calendar month work is performed.

3.2 City agrees to pay County within 30 days of the receipt of the County's invoice.

4. Liaison Responsibility. Doug Nassimbene, Field Services Supervisor, (503) 543-7146 ext. 4, or his designee will act as liaison from the City for this project. Janet Evans, Director, (503) 366-4660, will act as liaison from the County. For crew scheduling, contact Thomas Blum, Community Services Program Coordinator, (503) 397-6253 Ext 1481.

5. Special Requirements.

5.1 The County and City agree to comply with all applicable local, state, and federal ordinances, statutes, laws and regulations.

5.2 Subject to the limits of the Oregon Tort Claims Act and Article 11, Section 10 of the Oregon Constitution, Columbia County shall indemnify, defend and hold harmless City, its officers, employees, and agents from all claims, suits, actions or expenses of any nature resulting from or arising out of the acts, errors or omissions of County personnel acting pursuant to the terms of this Agreement. The County will carry one or more general liability policies and shall name the City as an additional insured.

5.3 Subject to the limits of the Oregon Tort Claims Act and Article 11, Section 7 of the Oregon Constitution, City shall indemnify, defend and hold harmless County, its officers, employees, and agents from all claims, suits, actions or expenses of any nature resulting from or arising out of the acts, errors or omissions of City personnel acting pursuant to the terms of this Agreement. The City will carry one or more general liability policies and shall name the County as an additional insured.

5.4 Record and Fiscal Control System. All payroll and financial records pertaining in whole or in part of this Agreement shall be clearly identified and readily accessible. Such records and documents should be retained for a period of three (3) years after receipt of final payment under this Agreement; provided that any records and documents that are the subject of audit findings shall be retained for a longer time until such audit findings are resolved.

5.5 Access to Records. The County, the State of Oregon, and the Federal Government, and their duly authorized representatives shall have access to the books, documents, papers, and records of the City which are directly pertinent to the agreement for the purpose of making audit, examination, excerpts, and transcripts.

5.6 This Agreement is expressly subject to the debt limitations of Oregon counties set forth in Article XI, Section 10, of the Oregon Constitution, and is contingent upon funds being appropriated thereof. Any provisions herein which would conflict with law are deemed inoperative to that extent.

5.7 Hazardous Materials.

5.7.1 No Work Crew provided under this Agreement shall be required to clean up any dump site when known or suspected hazardous materials are present.

5.7.2 In the event the Work Crew discovers known or suspected hazardous materials at any work site, the Work Crew Supervisor shall immediately cease the activities until such time as the site is inspected and declared or made safe by the appropriate hazardous materials authority.

5.8 Independent Contractor Status. The County is engaged under this Agreement as an independent contractor. The County, its employees and members of the Work Crew are not employees of the City and are not eligible for any benefits through the City.

5.9 Personnel. The County may assign such personnel as it deems necessary to do the work or services to be rendered under this Agreement.

6. Amendment. This Agreement may be amended at any time with the concurrence of both parties. Amendments become a part of this Agreement only after the written amendment has been signed by both parties.

7. Term of Agreement. This Agreement becomes effective on the date it is signed by the Board of County Commissioners, and is scheduled to terminate June 30, 2016, but may be renewed for two (2) additional one (1) year terms upon written agreement by both parties. This Agreement is subject to termination by either of the parties when thirty (30) days' written notice has been provided to the other party.

CITY

CITY OF SCAPPOOSE

By: Michael Sykes

Name:
City of Scappoose

Date: 6/15/15

BOARD OF COUNTY COMMISSIONERS
FOR COLUMBIA COUNTY, OREGON

By:_____
Henry Heimuller, Chair

By:_____
Anthony Hyde, Commissioner

By:_____
Earl Fisher, Commissioner

Date:_____

Approved as to form

By:_____
Office of County Counsel

ACORD®

CERTIFICATE OF LIABILITY INSURANCE

DATE (MM/DD/YYYY) 6/3/2014

THIS CERTIFICATE IS ISSUED AS A MATTER OF INFORMATION ONLY AND CONFERS NO RIGHTS UPON THE CERTIFICATE HOLDER. THIS CERTIFICATE DOES NOT AFFIRMATIVELY OR NEGATIVELY AMEND, EXTEND OR ALTER THE COVERAGE AFFORDED BY THE POLICIES BELOW. THIS CERTIFICATE OF INSURANCE DOES NOT CONSTITUTE A CONTRACT BETWEEN THE ISSUING INSURER(S), AUTHORIZED REPRESENTATIVE OR PRODUCER, AND THE CERTIFICATE HOLDER.

IMPORTANT: If the certificate holder is an ADDITIONAL INSURED, the policy(ies) must be endorsed. If SUBROGATION IS WAIVED, subject to the terms and conditions of the policy, certain policies may require an endorsement. A statement on this certificate does not confer rights to the certificate holder in lieu of such endorsement(s).

PRODUCER

Stamm Stuart Bybee Insurance Management
16455 S.E. Division

Portland OR 97236

CONTACT NAME: Yvette Kendall
PHONE (A/C, No, Ext): (503) 760-1030 FAX (A/C, No): (503) 760-9256
E-MAIL ADDRESS: yvette@ssbinsurance.com
PRODUCER CUSTOMER ID #: 00007662

INSURED

City of Scappoose
33568 E. Columbia Avenue

Scappoose OR 97056-3423

INSURER(S) AFFORDING COVERAGE	NAIC #
INSURER A: City/County Insurance Program	
INSURER B:	
INSURER C:	
INSURER D:	
INSURER E:	
INSURER F:	

COVERAGES CERTIFICATE NUMBER: 2014-15 REVISION NUMBER:

THIS IS TO CERTIFY THAT THE POLICIES OF INSURANCE LISTED BELOW HAVE BEEN ISSUED TO THE INSURED NAMED ABOVE FOR THE POLICY PERIOD INDICATED. NOTWITHSTANDING ANY REQUIREMENT, TERM OR CONDITION OF ANY CONTRACT OR OTHER DOCUMENT WITH RESPECT TO WHICH THIS CERTIFICATE MAY BE ISSUED OR MAY PERTAIN, THE INSURANCE AFFORDED BY THE POLICIES DESCRIBED HEREIN IS SUBJECT TO ALL THE TERMS, EXCLUSIONS AND CONDITIONS OF SUCH POLICIES. LIMITS SHOWN MAY HAVE BEEN REDUCED BY PAID CLAIMS.

INSR LTR	TYPE OF INSURANCE	ADDL INSR	SUBR WVD	POLICY NUMBER	POLICY EFF (MM/DD/YYYY)	POLICY EXP (MM/DD/YYYY)	LIMITS		
A	GENERAL LIABILITY X COMMERCIAL GENERAL LIABILITY CLAIMS-MADE X OCCUR GEN'L AGGREGATE LIMIT APPLIES PER: X POLICY PRO-JECT LOC			SCP-I2014	7/1/2014	7/1/2015	EACH OCCURRENCE	$	200,000
							DAMAGE TO RENTED PREMISES (Ea occurrence)	$	50,000
							MED EXP (Any one person)	$	10,000
							PERSONAL & ADV INJURY	$	200,000
							GENERAL AGGREGATE	$	600,000
							PRODUCTS - COMP/OP AGG	$	600,000
								$	
A	AUTOMOBILE LIABILITY X ANY AUTO ALL OWNED AUTOS SCHEDULED AUTOS X HIRED AUTOS X NON-OWNED AUTOS			SCP-I2014	7/1/2014	7/1/2015	COMBINED SINGLE LIMIT (Ea accident)	$	1,000,000
							BODILY INJURY (Per person)	$	
							BODILY INJURY (Per accident)	$	
							PROPERTY DAMAGE (Per accident)	$	
							Uninsured motorist combined	$	1,000,000
							PIP-Basic	$	10,000
A	X UMBRELLA LIAB X OCCUR EXCESS LIAB CLAIMS-MADE DEDUCTIBLE RETENTION $						EACH OCCURRENCE	$	15,000,000
							AGGREGATE	$	15,000,000
								$	
								$	
A	WORKERS COMPENSATION AND EMPLOYERS' LIABILITY ANY PROPRIETOR/PARTNER/EXECUTIVE OFFICER/MEMBER EXCLUDED? Y/N (Mandatory in NH) If yes, describe under DESCRIPTION OF OPERATIONS below	N/A		SCP-W2014	7/1/2014	7/1/2015	X WC STATU-TORY LIMITS OTH-ER		
							E.L. EACH ACCIDENT	$	500,000
							E.L. DISEASE - EA EMPLOYEE	$	500,000
							E.L. DISEASE - POLICY LIMIT	$	500,000

DESCRIPTION OF OPERATIONS / LOCATIONS / VEHICLES (Attach ACORD 101, Additional Remarks Schedule, if more space is required)

Columbia County, its officers, agents and employees are added as an additional participant as respects liability arising out of the operations of the Columbia County Firearms Range Complex

CERTIFICATE HOLDER

Columbia County
230 Strand Street, Room 318
St. Helens, OR 97051

CANCELLATION

SHOULD ANY OF THE ABOVE DESCRIBED POLICIES BE CANCELLED BEFORE THE EXPIRATION DATE THEREOF, NOTICE WILL BE DELIVERED IN ACCORDANCE WITH THE POLICY PROVISIONS.

AUTHORIZED REPRESENTATIVE

Michael Bybee/YVKE

© 1988-2009 ACORD CORPORATION. All rights reserved.
The ACORD name and logo are registered marks of ACORD

HEALTHY START 2014-2015

AMENDMENT NUMBER 1 TO PERSONAL SERVICES CONTRACT
BY AND BETWEEN COLUMBIA COUNTY AND COMMUNITY ACTION TEAM, INC. FOR
HEALTHY START SERVICES

This Amendment No. 1 to the Personal Services Contract for Healthy Start Services is made and entered into by and between COLUMBIA COUNTY, a political subdivision of the State of Oregon, hereinafter referred to as "County", and Community Action Team, Inc., hereinafter referred to as "Contractor".

1. This Amendment is to the Personal Services Contract by and between the County and Community Action Team, Inc. effective July 1, 2014.

2. Paragraph 2 is amended to read, as follows: "Completion Date. The completion date for this Agreement shall be no later than ~~June~~ **September** 30, 2015, and is subject to the availability of funds. The completion date for this Agreement may be extended for an additional period of up to 1 year upon written agreement."

3. Paragraph 4, is amended to read, as follows: "Consideration. County shall pay Contractor on a fee-for-service basis, a total amount not to exceed $~~114,477.00~~ **139,107.90**, said amount to be the complete compensation to Contractor for the services performed under this Agreement. This fee shall include all expenses. This Agreement is subject to the appropriation of funds by County, and/or the receipt of funds from state and federal sources. In the event sufficient funds shall not be appropriated, and/or received, by County for the payment of consideration required to be paid under this Agreement, then County may terminate this Agreement in accordance with Section 16 of this Agreement.

   Total funds for this contract period are Healthy Start State General funds and Medicaid reimbursements less $~~18,750.00~~ **23,437.50** which is the required 50% match of the estimated $~~37,500.00~~ **46,875.00** of the Healthy Start State General Fund Medicaid reimbursement for 2014-2015, and includes the program expense of the 1% Department of Medical Assistance Program administrative charge, the program expense of the Early Learning Division ("ELD") administrative charge, **and a County administrative fee in the amount of $1,221.00.**

   The Medicaid match, 1% Department of Medical Assistance Program Oregon Health Authority (OHA) administrative charge and the ELD administrative charge will be paid by the County to the ELD quarterly as per the 2013-2015 County Medicaid Administrative Activities Intergovernmental Agreement #COL1315 **as amended** between County and the ELD. The Contractor will be paid the quarterly Total County Payment on the Medicaid Reimbursement Statement for this program when such funds are received by the County from the ELD. Should the match requirement for the current biennium exceed the total held of $~~37,500.00~~ **46,875.00**, County shall deduct the excess amount required for match from quarterly State General Fund payments. Should the program not earn the total estimated allowable Medicaid administrative funds, the County is not required to pay the ELD the required 50% match and such match shall be paid to the Contractor. Four quarterly payments of Healthy Start State General Funds shall be made each in the amount of $28,619.25 for the 5th, 6th, 7th and 8th quarters of the 2013-2015 biennium after successful completion of the services provided in the previous

quarter as determined by the County and upon receipt of funds by the County. Payments for the 5th, 6th, 7th and 8th quarters are contingent upon receipt of ELD funds by the County. One payment of Healthy Start State General Funds shall be made in the amount of $24,630.90 upon successful completion of services provided from July 1, 2015 to September 30, 2015, and contingent upon receipt of ELD funds by the County for that period. All federal funds are required to be paid on a reimbursement basis.

4. This Amendment No. 1 is effective on the date last signed, below, and shall be retroactive to July 1, 2015.

5. Except as specifically amended herein, the Personal Services Contract by and between the County and Contractor for Healthy Start Services effective July 1, 2014, shall remain in full force and effect.

CONTRACTOR

Name: Community Action Team

By: _____

Title: Executive Director

Date: _____

Approved as to form

By: _____
Office of the County Counsel

BOARD OF COUNTY COMMISSIONERS
FOR COLUMBIA COUNTY, OREGON

By: _____
Heimuller, Chair

By: _____
Anthony Hyde, Commissioner

By: _____
Earl Fisher, Commissioner

Date: _____

In compliance with the Americans with Disabilities Act, this document is available in alternate formats such as Braille, large print, audio tape, oral presentation, and computer disk. To request an alternate format call the State of Oregon, Oregon Youth Authority, Budget and Contracts Unit at (503) 373-7371.

AGREEMENT #13194

JUVENILE CRIME PREVENTION BASIC SERVICES AND DIVERSION SERVICES INTERGOVERNMENTAL AGREEMENT

This Juvenile Crime Prevention Basic Services and Diversion Services Intergovernmental Agreement (the "Agreement") is between the State of Oregon acting by and through its Oregon Youth Authority ("OYA") and Columbia County, a political subdivision of the State of Oregon ("County").

WHEREAS, pursuant to ORS 190.110, ORS 420.019 and ORS 420A.010(6), the parties have authority to enter into intergovernmental cooperative agreements, and therefore agree to work together, focusing on the Oregon Benchmark – Preventing and Reducing Juvenile Crime, and to improve collaborative efforts.

NOW, THEREFORE, in consideration of the foregoing premises and other good and valuable consideration, the receipt and sufficiency of which are hereby acknowledged, the parties hereto agree as follows:

AGREEMENT

1. Effective Date and Duration. This Agreement shall become effective as of July 1, 2015. Unless extended or terminated earlier in accordance with its terms, this Agreement shall terminate on June 30, 2017.

2. Agreement Documents, Order of Precedence. This Agreement consists of the following documents, which are listed in descending order of precedence. In the event of a conflict between two or more of these documents, the language in the document with the highest precedence shall control.

This Agreement without Exhibits

Exhibit A	Definitions
Exhibit B	Terms and Conditions
Exhibit C	Program Requirements
Exhibit D	Provider Requirements
Exhibit E	Funding
Exhibit F	Service Plan

All exhibits by this reference are hereby made part of this Agreement. Exhibits A-E are attached; Exhibit F is not attached but will be on file with County and OYA.

The parties, by signature of their authorized representative, hereby acknowledge that they have read this Agreement, understand it, and agree to be bound by its terms and conditions.

IN WITNESS WHEREOF, the parties hereto have caused this Agreement to be duly executed as of the dates set forth below their respective signatures.

STATE OF OREGON ACTING BY AND THROUGH ITS
OREGON YOUTH AUTHORITY

By:_____
Name: Shawn Waite
Title: Chief Financial Officer
Date:_____

COUNTY

By:_____
Name:_____
Title:_____
Date:_____

APPROVED FOR LEGAL SUFFICIENCY

By: Approved via e-mail
Name: Susan L. Amesbury
Title: Senior Assistant Attorney General
Date: 6/12/15

Reviewed by OYA Contract Specialist: _____Date: _____

JUVENILE CRIME PREVENTION BASIC SERVICES AND DIVERSION SERVICES INTERGOVERNMENTAL AGREEMENT
EXHIBIT A
DEFINITIONS

As used in this Agreement, the following words and phrases shall have the indicated meanings.

1. **"Administrative Costs"** means Allowable Costs incurred by County or a Provider in administering implementation of the Service Plan, as determined in accordance with 2 CFR Part 225 and 2 CFR Part 230 (Office of Management and Budget Circulars A-87 and A-122, respectively) as revised from time to time.

2. **"Agreement"** means this Intergovernmental Agreement between OYA and County.

3. **"Allowable Costs"** means those costs that are reasonable and necessary for delivery of Services in implementation of the Service Plan as determined in accordance with 2 CFR Part 225 and 2 CFR Part 230 (Office of Management and Budget Circulars A-87 and A-122, respectively) as revised from time to time.

4. **"Claim"** has the meaning set forth in Section 15 of Exhibit B.

5. **"Client"** means any individual who receives a Service.

6. **"Close Custody Facility**" for purposes of this Agreement means OYA Youth Correctional Facilities and OYA Transition Programs.

7. **"Community Programs"** means those services and sanctions operated or administered by OYA and provided to delinquent youth outside the Close Custody Facilities. These include, but are not limited to, residential youth programs, certified family resources, individualized services, and other programs developed in accordance with the Service Plan.

8. **"County"** has the meaning set forth in the first paragraph of this Agreement.

9. **"Discretionary Bed Allocation"** or **"DBA"** means the maximum number of youth from the County who may reside in beds at OYA's Close Custody Facilities. The method for calculating the maximum number of youth is set forth in OYA's administrative rules, OAR 416-410-0010 through 416-410-0060. For the purposes of this Agreement, at a minimum, the following youth from the County shall be considered to be residing in beds at OYA's Close Custody Facilities:

a. Youth committed to the custody of the OYA for placement at a Close Custody Facility by the juvenile court of jurisdiction under ORS 419C.478, and

b. Youth whose parole from a Close Custody Facility has been revoked under the provisions of ORS 420.045, 420A.115 or 420A.120, except youths whose parole has been revoked and who were originally committed for Rape in the first degree, ORS 163.375, Sodomy in the first degree, ORS 163.405, and Unlawful Sexual Penetration in the first degree, ORS 163.411.

Youth placed at a Close Custody Facility due to administrative transfer from the Department of Corrections under ORS 420.011(2) and those youth placed in Public Safety Reserve Bed Space in

accordance with OYA administrative rules OAR 416-410-0010 and 416-410-0020, shall, for purposes of this Agreement, not be counted against the DBA.

10. **"Diversion Funds"** means funds provided under this Agreement for Diversion Services. Diversion Funds are part of the budget of the Oregon Youth Authority.

11. **"Diversion Services"** means services outlined in the Service Plan as defined under ORS 420.017 and 420.019 and OAR 416-410-0030. Diversion Services are community based and operated to divert commitment of youth from OYA Close Custody Facilities.

12. **"Evaluation Costs"** means Allowable Costs incurred by a County or a Provider and associated with completion of administration of risk screen, interim review, and JJIS data fields.

13. **"JCP Basic Services"** or **"Basic Services"** means services outlined in the Service Plan and provided under this Agreement for detention and other juvenile department services including shelter care, treatment services, graduated sanctions and aftercare for youth offenders.

14. **"JCP Basic Services Funds"** means funds provided under this Agreement for JCP Basic Services. JCP Basic Services Funds are part of the budget of the Oregon Youth Authority.

15. **"JJIS"** is the Juvenile Justice Information System administered by OYA under ORS 420A.223.

16. **"OYA"** means the Oregon Youth Authority.

17. **"Provider"** has the meaning set forth in Section 5 of Exhibit B.

18. **"Public Safety Reserve Bed Space"** means those beds in OYA's Close Custody Facilities that are reserved for youth who have committed offenses designated by the OYA in its administrative rules OAR 416-410-0010 and 416-410-0020.

19. **"Service"** means any service or group of related services delivered as part of Service Plan implementation.

20. **"Service Plan"** means the County's plan for 2015-2017 JCP Basic and Diversion Services approved by OYA and developed in coordination with the Local Coordinated Comprehensive Plan, the provisions of which are incorporated herein by this reference. The Service Plan includes, by funding source, high level outcomes, services to be provided, and a budgeted amount for each service. Until the Service Plan for 2015-2017 has been developed and approved as described above, the term "Service Plan" has the meaning set forth in Exhibit C, Section 5.

21. **"Supplanting"** means replacing funding County would have otherwise provided to the County Juvenile Department to serve the target populations in this Agreement.

22. "**Target Population for Basic Services"** means youths ages 10 to 17 years of age who have been referred to a County Juvenile Department and who can benefit from services of the County Juvenile Department, including but not to limited to, detention, shelter care, treatment services, graduated sanctions, and aftercare, and who have more than one of the following risk factors:

a. Antisocial behavior;
b. Poor family functioning or poor family support;
c. Failure in school;
d. Substance abuse problems; or
e. Negative peer association.

23. "Target Population for Diversion Services" means youth offenders ages 12 to 18 years of age who have been adjudicated for a Class A Misdemeanor or more serious act of delinquency and who have been identified to be at risk of commitment to OYA Close Custody Facilities.

JUVENILE CRIME PREVENTION BASIC SERVICES AND DIVERSION SERVICES INTERGOVERNMENTAL AGREEMENT
EXHIBIT B
TERMS AND CONDITIONS

1. Payment and Recovery of Funds.

a. Payment Generally. Subject to the conditions precedent set forth below, OYA shall pay funds to the County as set forth in Exhibit E for performance of Services under this Agreement on an expense reimbursement basis.

b. Payment Requests and Notices. County shall send all payment requests and notices, unless otherwise specified in this Agreement, to OYA.

c. Conditions Precedent to Payment. OYA's obligation to pay funds to County under this Agreement is subject to satisfaction, with respect to each payment, of each of the following conditions precedent:

(i) OYA has received sufficient funding, appropriations and other expenditure authorizations to allow OYA, in the exercise of its reasonable administrative discretion, to make the payment.

(ii) No default as described in Section 7 of this Exhibit has occurred.

(iii) County's representations and warranties set forth in Section 2 of this Exhibit are true and correct on the date of payment with the same effect as though made on the date of payment.

(iv) OYA has received a timely written quarterly expenditure report/payment request from County on a form designated by OYA.

(v) OYA has received from County and approved the County's Service Plan for the 2015-2017 biennium and OYA has received from County any Service Plan amendments, as applicable, as described in Exhibit C, Section 7 on or prior to the date of the payment request.

(vi) The expenditure report/payment request is received no later than 60 days after the termination or expiration of this Agreement.

(vii) With respect only to payment of Diversion Services funds, County has not exceeded its Discretionary Bed Allocation for ninety (90) or more consecutive days.

d. Recovery of Funds. If payments to County by OYA under this Agreement, are made in error or are found by OYA to be excessive under the terms of this Agreement, OYA, after giving written notification to the County shall enter into nonbinding discussions with County within 15 days of the written notification. If, after discussions, the parties agree that payments were made in error or found to be excessive, OYA may withhold payments due to County under this Agreement in such amounts, and over such periods of time, as are deemed necessary by OYA to recover the amount of the overpayment. If, after discussions, the parties do not agree that the payments were made in error or found to be excessive, the parties may agree to consider further appropriate dispute resolution processes, as provided in Section 29 of this Exhibit

B. This Section 1.d. shall survive expiration or earlier termination of this Agreement and be fully enforceable thereafter.

(i) Subject to the debt limitations in Article XI, Section 10 of the Oregon Constitution, OYA's right to recover overpayments from County under this Agreement is not subject to or conditioned on County's recovery of any money from any other entity.

(ii) If the exercise of OYA's right to offset under this provision requires the County to complete a re-budgeting process, nothing in this provision shall be construed to prevent the County from fully complying with its budgeting procedures and obligations, or from implementing decisions resulting from those procedures and obligations.

(iii) Nothing in this provision shall be construed as a requirement or agreement by the County to negotiate and execute any future contract with OYA.

(iv) Nothing in this Section 1.d shall require County or OYA to act in violation of state or federal constitutions, statutes, regulations or rules.

(v) Nothing in this Section 1.d shall be construed as a waiver by either party of any process or remedy that might otherwise be available.

2. Representations and Warranties.

a. County represents and warrants as follows:

(i). Organization and Authority. County is a political subdivision of the State of Oregon duly organized and validly existing under the laws of the State of Oregon. County has full power, authority and legal right to make this Agreement and to incur and perform its obligations hereunder.

(ii). Due Authorization. The making and performance by County of this Agreement (1) has been duly authorized by all necessary action by County and (2) does not and will not violate any provision of any applicable law, rule, regulation, or order of any court, regulatory commission, board, or other administrative agency or any provision of County's charter or other organizational document and (3) does not and will not result in the breach of, or constitute a default or require any consent under any other agreement or instrument to which County is a party or by which County may be bound or affected. No authorization, consent, license, approval of, filing or registration with or notification to any other governmental body or regulatory or supervisory authority is required for the execution, delivery or performance by County of this Agreement.

(iii). Binding Obligation. This Agreement has been duly executed and delivered by County and constitutes a legal, valid and binding obligation of County, enforceable in accordance with its terms subject to the laws of bankruptcy, insolvency, or other similar laws affecting the enforcement of creditors' rights generally.

(iv). Accuracy of Information. The statements made in and the information provided in connection with any applications, requests or submissions to OYA hereunder or in connection with this Agreement are true and accurate in all materials respects.

(v). Services. The delivery of each Service will comply with the terms and conditions of this Agreement and meet the standards for such Service as set forth herein, including but not limited to, any terms, conditions, standards and requirements set forth in the Service Plan.

b. OYA represents and warrants as follows:

(i). Organization and Authority. OYA has full power, authority and legal right to make this Agreement and to incur and perform its obligations hereunder.

(ii). Due Authorization. The making and performance by OYA of this Agreement (1) has been duly authorized by all necessary action by OYA and (2) does not and will not violate any provision of any applicable law, rule, regulation, or order of any court, regulatory commission, board, or other administrative agency and (3) does not and will not result in the breach of, or constitute a default or require any consent under any other agreement or instrument to which OYA is a party or by which OYA may be bound or affected. No authorization, consent, license, approval of, filing or registration with or notification to any governmental body or regulatory or supervisory authority is required for the execution, delivery or performance by OYA of this Agreement, other than approval by the Department of Justice if required by law.

(iii). Binding Obligation. This Agreement has been duly executed and delivered by OYA and constitutes a legal, valid and binding obligation of OYA, enforceable in accordance with its terms subject to the laws of bankruptcy, insolvency, or other similar laws affecting the enforcement of creditors' rights generally.

(iv). Accuracy of Information. The statements made in and the information provided in connection with any applications, requests or submissions to County hereunder or in connection with this Agreement are true and accurate in all materials respects.

c. The warranties set forth above are in addition to, and not in lieu of, any other warranties set forth in this Agreement or implied by law.

3. Expenditure of Funds. County may expend the funds provided to County under this Agreement solely on Allowable Costs necessarily incurred in implementation of the Service Plan during the term of this Agreement, subject to the following limitations (in addition to any other restrictions or limitations imposed by this Agreement):

a. No more than 10% of the aggregate funds paid under this Agreement to County may be expended on Administrative Costs and Evaluation Costs. These limits apply in total to all County government organizational units, Providers and subcontractors. This applies to all funds paid pursuant to this Agreement. County shall record Administrative Costs on forms provided by OYA.

b. County may expend Diversion Services funds and Basic Services funds solely on Diversion Services and Basic Services, respectively.

c. County may not expend and shall prohibit all Providers from expending on the delivery of any Service, any funds provided to County under this Agreement in excess of the amount reasonable and necessary to provide quality delivery of that Service.

d. County may not use funds provided to County under this Agreement to reimburse any person or entity for expenditures made, or to pay for goods or services provided, prior to the effective date or after the termination date of this Agreement.

e. County shall not use the funds provided to County under this Agreement to supplant money otherwise provided to the County Juvenile Department for services to delinquent youth. County reductions to local funding do not constitute supplanting if the County reductions to local funding are taken proportionately across all County departments.

4. Expenditure Reports. County shall submit to OYA, on forms designated by OYA, a quarterly written detail expenditure report on the County's actual expenditures during the prior calendar quarter that are consistent with the Service Plan.

5. Provider Contracts. Except as otherwise expressly provided in the Service Plan, County may contract with a third person or entity (a "Provider") for delivery of a particular Service or portion thereof (a "Provider Contract"). County may permit a Provider to subcontract with a third person or entity for delivery of a particular Service or portion thereof and such subcontractors shall also be considered Providers for purposes of this Agreement and the subcontracts shall be considered Provider Contracts for purposes of this Agreement. County shall not permit any person or entity to be a Provider unless the person or entity holds all licenses, certificates, authorizations and other approvals required by applicable law to deliver the Service. The Provider Contract must be in writing and contain all provisions of this Agreement necessary for County to comply with its obligations under this Agreement and applicable to the Provider's performance under the Provider Contract, including but not limited to, all provisions of this Agreement that expressly require County to require Provider's compliance with respect thereto. County shall maintain an originally executed copy of each Provider Contract at its office and shall furnish a copy of any Provider Contract to OYA upon request.

6. Records Maintenance, Access and Confidentiality.

a. County shall maintain, and require all Providers to maintain, all fiscal records relating to this Agreement and any Provider Contract, as applicable, in accordance with generally accepted accounting principles. In addition, County shall maintain, and require all Providers to maintain, any other records (including but not limited to statistical records) pertinent to this Agreement in such a manner as to clearly document County's and each Provider's performance. County acknowledges and agrees that OYA and the Oregon Secretary of State's Office and the federal government and their duly authorized representatives shall have access to such fiscal and statistical records and other books, documents, papers, plans and writings of County that are pertinent to this Agreement to perform examinations, audits and program reviews and make excerpts and transcripts. A copy of any audit or report will be made available to County. County shall retain and keep accessible all such fiscal and statistical records, books, documents, papers, plans, and writings for a minimum of six (6) years, or such longer period as may be required by applicable law, following final payment and termination of this Agreement, or until the conclusion of any audit, controversy or litigation arising out of or related to this Agreement, whichever date is later.

b. Unless otherwise required by law, the use or disclosure by the County and its employees and agents of any information concerning a recipient of Services, for any purpose not directly connected with the administration of the County's responsibilities with respect to such Services, is prohibited, except on written consent of the person or persons authorized by law to consent to such use or disclosure. The County shall prohibit the use or disclosure by the County's

Providers and their employees and agents of any information concerning a recipient of Services provided under the applicable Provider Contracts, for any purpose not directly connected with the administration of the County's or Provider's responsibilities with respect to such Services, except on written consent of the person or persons authorized by law to consent to such use or disclosure. All records and files shall be appropriately secured to prevent access by unauthorized persons. The County shall, and shall require its Providers to, comply with all appropriate federal and state laws, rules and regulations regarding confidentiality of Client records.

c. OYA shall include a provision in its contracts with contractors who utilize information related to the Services provided under this Agreement for research purposes, providing that contractor and its subcontractors under that contract shall not release confidential information on individual youth for purposes unrelated to the administration of the contract or required by applicable law, and a provision that contractor or its subcontractors under that contract shall appropriately secure all records and files to prevent access by unauthorized persons.

d. County shall maintain and require all Providers to maintain a Client record for each youth that receives a Service.

7. County Default. County shall be in default under this Agreement upon the occurrence of any of the following events:

a. County fails to perform, observe or discharge any of its covenants, agreements or obligations set forth herein, including but not limited to, County's failure to comply with the Service Plan;

b. Any representation, warranty or statement made by County herein or in any documents or reports made by County in connection herewith that are reasonably relied upon by OYA to measure the delivery of Services, the expenditure of funds or the performance by County is untrue in any material respect when made;

c. County (i) applies for or consents to the appointment of, or taking of possession by, a receiver, custodian, trustee, or liquidator of itself or all of its property, (ii) admits in writing its inability, or is generally unable, to pay its debts as they become due, (iii) makes a general assignment for the benefit of its creditors, (iv) is adjudicated a bankrupt or insolvent, (v) commences a voluntary case under the Federal Bankruptcy Code (as now or hereafter in effect), (vi) files a petition seeking to take advantage of any other law relating to bankruptcy, insolvency, reorganization, winding-up, or composition or adjustment of debts, (vii) fails to controvert in a timely and appropriate manner, or acquiesces in writing to, any petition filed against it in an involuntary case under the Bankruptcy Code, or (viii) takes any action for the purpose of effecting any of the foregoing; or

d. A proceeding or case is commenced, without the application or consent of County, in any court of competent jurisdiction, seeking (i) the liquidation, dissolution or winding-up, or the composition or readjustment of debts, of County, (ii) the appointment of a trustee, receiver, custodian, liquidator, or the like of County or of all or any substantial part of its assets, or (iii) similar relief in respect to County under any law relating to bankruptcy, insolvency, reorganization, winding-up, or composition or adjustment of debts, and such proceeding or case continues undismissed, or an order, judgment, or decree approving or ordering any of the foregoing is entered and continues unstayed and in effect for a period of sixty consecutive days, or an order for relief against County is entered in an involuntary case under the federal Bankruptcy Code (as now or hereafter in effect).

8. OYA Default. OYA shall be in default under this Agreement upon the occurrence of any of the following events:

a. OYA fails to perform, observe or discharge any of its covenants, agreements, or obligations set forth herein: or

b. Any representation, warranty or statement made by OYA herein or in any documents or reports made by OYA in connection herewith that are reasonably relied upon by County to measure performance by OYA is untrue in any material respect when made.

9. Termination.

a. County Termination. County may terminate this Agreement in its entirety or may terminate its obligation to provide services under this Agreement for Diversion Services or Basic Services, individually:

(i) For its convenience, upon 90 days advance written notice to OYA.

(ii) Upon 30 days advance written notice to OYA, if OYA is in default under this Agreement and such default remains uncured at the end of said 30 day period or such longer period, if any, as County may specify in the notice.

(iii) Upon 45 days advance written notice to OYA, if County does not obtain funding, appropriations and other expenditure authorizations from County's governing body, federal, state or other sources sufficient to permit County to satisfy its performance obligations under this Agreement, as determined by County in the reasonable exercise of its administrative discretion.

(iv) Immediately upon written notice to OYA, if Oregon statutes or federal laws, regulations or guidelines are modified, changed or interpreted by the Oregon Legislative Assembly, the federal government or a court in such a way that County no longer has the authority to meet its obligations under this Agreement.

b. OYA Termination. OYA may terminate this Agreement in its entirety or may terminate its obligation to provide funds under this Agreement for Diversion Services or Basic Services, individually:

(i) Upon 90 days advance written notice to County, if OYA determines, in its sole discretion, to end all or any portion of the funds to County under this Agreement.

(ii) Upon 45 days advance written notice to County, if OYA does not obtain funding, appropriations and other expenditure authorizations from federal, state or other sources sufficient, in the exercise of OYA's reasonable administrative discretion, to meet the payment obligations of OYA under this Agreement.

(iii) Immediately upon written notice to County if Oregon or federal laws, regulations or guidelines are modified, changed or interpreted by the Oregon Legislative Assembly, the federal government or a court in such a way that OYA does not have the authority to meet its obligations under this Agreement or no longer has the authority to provide the funds from the funding source it had planned to use.

(iv) Upon 30 days advance written notice to County, if County is in default under this Agreement and such default remains uncured at the end of said 30 day period or such longer period, if any, as OYA may specify in the notice.

(v) Immediately upon written notice to County, if any license or certificate required by law or regulation to be held by County or a Provider to deliver a Service is for any reason denied, revoked, suspended, not renewed or changed in such a way that County or a Provider no longer meets requirements to deliver the Service. This termination right may only be exercised with respect to the particular group of Services (Diversion or Basic) impacted by loss of necessary licensure or certification.

(vi) Immediately upon written notice to County, if OYA determines that County or any of its Providers have or may have endangered, or are or may be endangering the health or safety of a Client or others.

10. Effect of Termination

a. Entire Agreement. Upon termination of this Agreement in its entirety, OYA shall have no further obligation to pay funds to County under this Agreement, whether or not OYA has paid to County all funds described in Exhibit E. Notwithstanding the foregoing, OYA shall make payments to reimburse County for services provided prior to the effective date of termination where such services are authorized pursuant to this Agreement and are not disputed by OYA and where the invoice was submitted within 60 days of the termination of the Agreement.

b. Individual Funding Source. Upon termination of OYA's obligation to provide funding under this Agreement for Services in a particular area (Diversion or Basic), OYA shall have no further obligation to pay or disburse any funds to County under this Agreement for Services in that area. Notwithstanding the foregoing, OYA shall make payments to reimburse County for services provided prior to the effective date of termination where such services are authorized pursuant to this Agreement and are not disputed by OYA.

c. Survival. Notwithstanding subsections (a) through (b) above, exercise of the termination rights in Section 9 of this Exhibit B or expiration of this Agreement in accordance with its terms, shall not affect County's or OYA's obligations under this Agreement or OYA's or County's right to enforce this Agreement against County or OYA in accordance with its terms, with respect to funds actually received by County under this Agreement, or with respect to Services actually delivered. Specifically, but without limiting the generality of the preceding sentence, exercise of a termination right set forth in Section 9 of this Exhibit B or expiration of this Agreement shall not affect either party's representations and warranties, reporting obligations, record-keeping and access obligations, confidentiality obligations, contribution obligations, indemnity obligations, governing law and consent to jurisdiction, assignments and successors in interest, provider contract obligations, provider insurance obligations, ownership of intellectual property obligations, OYA's spending authority, the restrictions and limitations on County's expenditure of funds actually received by County hereunder, or OYA's right to recover from County, in accordance with the terms of this Agreement, any funds paid to County that are identified by OYA as an overpayment. If a termination right set forth in Section 9 of this Exhibit B is exercised, both parties shall make reasonable good faith efforts to minimize unnecessary disruption or other problems associated with the termination.

11. Unilateral Modification. If the Oregon Legislative Assembly, Legislative Emergency Board or Oregon Department of Administrative Services increases or decreases the amount of money appropriated or allotted for implementation of the Services under this Agreement, OYA may, by written notice to County, unilaterally increase or decrease the amount of the funding in this Agreement, in proportion to the increase or decrease in the appropriation or allotment, provided that OYA increases or decreases, in the same proportion, the funds awarded to all other counties under similar agreements. In such a circumstance, if requested by either party, the parties shall execute an amendment to this Agreement reflecting an increase or decrease in the funding implemented under this Section. Nothing in this Section shall limit or restrict OYA's rights under this Agreement to suspend payment of funds or to terminate this Agreement (or portion thereof as provided in Section 9 of this Exhibit B) as a result of a reduction in appropriations or allotments. This Section 11 is not applicable to any funding change that requires a different or new service to be provided. In response to a funding change pursuant to this Section 11 of the Agreement, County shall submit a new Service Plan to OYA for approval in a format and timeline prescribed by OYA. Such Service Plan shall be effective no sooner than the effective date of the funding change.

12. Notice. Except as otherwise expressly provided in this Agreement, any communications between the parties hereto or notices to be given hereunder shall be given in writing by personal delivery, facsimile, electronic mail, or mailing the same, postage prepaid to County or OYA at the address or number set forth below, or to such other addresses or numbers as either party may indicate pursuant to this Section. Any communication or notice so addressed and mailed shall be effective five (5) days after mailing. Any communication or notice delivered by facsimile shall be effective on the day the transmitting machine generates a receipt of the successful transmission, if transmission was during normal business hours of the recipient, or on the next business day, if transmission was outside normal business hours of the recipient. Any communication or notice delivered by electronic mail shall be effective on the day of notification of delivery receipt, if delivery was during normal business hours of the recipient, or on the next business day, if delivery was outside normal business hours of the recipient. Any communication or notice given by personal delivery shall be effective when actually delivered.

To OYA: Philip Cox
Oregon Youth Authority
530 Center St. NE, Suite 200
Salem, Oregon 97301-3765
Voice: (503) 373-7531
Facsimile: 503-373-7921
E-mail: Philip.Cox@oya.state.or.us

To County: Janet Evans
Columbia County Dept. of Community Corrections
230 Strand St.
St. Helens, OR 97051
Voice: 503-397-0275
Facsimile: 503-397-7256
E-Mail: janet.evans@co.columbia.or.us

The supervising representatives of the parties for purposes of this Agreement are indicated above.

13. Severability. The parties agree that if any term or provision of this Agreement is declared by a court of competent jurisdiction to be illegal or in conflict with any law, the validity

of the remaining terms and provisions shall not be affected, and the rights and obligations of the parties shall be construed and enforced as if the Agreement did not contain the particular term or provision held to be invalid.

14. Counterparts. This Agreement may be executed in several counterparts, all of which when taken together shall constitute one agreement binding on all parties, notwithstanding that all parties are not signatories to the same counterpart. Each copy of this Agreement so executed shall constitute an original.

15. Governing Law, Consent to Jurisdiction. This Agreement shall be governed by and construed in accordance with the laws of the State of Oregon without regard to principles of conflicts of law. Any claim, action, suit or proceeding (collectively, "Claim") between Agency (and/or any other agency or department of the State of Oregon) and County that arises from or relates to this Agreement shall be brought and conducted solely and exclusively within a Circuit Court in the State of Oregon; provided, however, if a Claim must be brought in a federal forum, then it shall be brought and conducted solely and exclusively within the United States District Court for the District of Oregon. In no event shall this Section be construed as a waiver by the State of Oregon of any form of defense or immunity, whether sovereign immunity, governmental immunity, immunity based on the eleventh amendment to the Constitution of the United States or otherwise, from any Claim or from the jurisdiction of any court. COUNTY, BY EXECUTION OF THIS AGREEMENT, HEREBY CONSENTS TO THE IN PERSONAM JURISDICTION OF SAID COURTS.

16. Compliance with Applicable Law. Both parties shall comply and County shall require all Providers to comply with all federal, state and local laws, regulations, executive orders and ordinances applicable to the Agreement or to the delivery of Services. Without limiting the generality of the foregoing, the parties expressly agree to comply with the following laws, regulations and executive orders to the extent they are applicable to the Agreement: (i) Titles VI and VII of the Civil Rights Act of 1964, as amended; (ii) Sections 503 and 504 of the Rehabilitation Act of 1973, as amended; (iii) the Americans with Disabilities Act of 1990, as amended; (iv) Executive Order 11246, as amended; (v) the Health Insurance Portability and Accountability Act of 1996; (vi) the Age Discrimination in Employment Act of 1967, as amended, and the Age Discrimination Act of 1975, as amended; (vii) the Vietnam Era Veterans' Readjustment Assistance Act of 1974, as amended; (viii) ORS Chapter 659, as amended; (ix) all regulations and administrative rules established pursuant to the foregoing laws; (x) all state laws requiring reporting of Client abuse; and (xi) all other applicable requirements of federal and state civil rights and rehabilitation statutes, rules and regulations. These laws, regulations and executive orders are incorporated by reference herein to the extent that they are applicable to the Agreement and required by law to be so incorporated. All employers, including County and OYA, that employ subject workers who provide Services in the State of Oregon shall comply with ORS 656.017 and provide the required Workers' Compensation coverage, unless such employers are exempt under ORS 656.126. County shall require that all Providers comply with these requirements and obtain any insurance required elsewhere in this Agreement.

17. Assignments, Successors in Interest.

a. County shall not assign, delegate, or transfer its interest in this Agreement without prior written approval of OYA. Any such assignment or transfer, if approved, is subject to such conditions and provisions as OYA may deem necessary. No approval by OYA of any assignment or transfer of interest shall be deemed to create any obligation of OYA in addition to those set forth in the Agreement.

b. The provisions of this Agreement shall be binding upon and shall inure to the benefit of the parties hereto, and their respective successors and permitted assigns.

18. No Third Party Beneficiaries. OYA and County are the only parties to this Agreement and are the only parties entitled to enforce its terms. The parties agree that County's performance under this Agreement is solely for the benefit of OYA to assist and enable OYA to accomplish its statutory mission. Nothing in this Agreement gives, is intended to give, or shall be construed to give or provide any benefit or right, whether directly, indirectly or otherwise, to third persons any greater than the rights and benefits enjoyed by the general public unless such third persons are individually identified by name herein and expressly described as intended beneficiaries of the terms of this Agreement.

19. Integration and Waiver. This Agreement, including all of its Exhibits, constitutes the entire agreement between the parties on the subject matter hereof. There are no understandings, agreements, or representations, oral or written, not specified herein regarding this Agreement. The failure of either party to enforce any provision of this Agreement shall not constitute a waiver by that party of that or any other provision. The remedies provided herein are cumulative and not exclusive of any remedies provided by law. No waiver or consent shall be effective unless in writing and signed by the party against whom it is asserted.

20. Amendment. No amendment, modification or change of terms of this Agreement shall bind either party unless in writing and signed by all the parties except as provided in Section 11 of this Exhibit B and Sections 5.a and 7.d of Exhibit C, and in any event no amendment, modification, or change of terms shall be effective until all approvals required by law have been obtained from the Department of Justice. Such amendment, modification or change, if made, shall be effective only in the specific instance and for the specific purpose given.

21. Headings. The headings and captions to sections of this Agreement have been inserted for identification and reference purposes only and shall not be used to construe the meaning or to interpret this Agreement.

22. Construction. The provisions in this Agreement are the product of extensive negotiations between the State of Oregon and representatives of county governments. The provisions of this Agreement are to be interpreted and their legal effects determined as a whole. An arbitrator or court interpreting this Agreement shall give a reasonable, lawful and effective meaning to the Agreement to the extent possible, consistent with the public interest.

23. Contribution

a. If any third party makes any claim or brings any action, suit or proceeding alleging a tort as now or hereafter defined in ORS 30.260 ("Third Party Claim") against a party (the "Notified Party") with respect to which the other party ("Other Party") may have liability, the Notified Party must promptly notify the Other Party in writing of the Third Party Claim and deliver to the Other Party a copy of the claim, process, and all legal pleadings with respect to the Third Party Claim. Either party is entitled to participate in the defense of a Third Party Claim, and to defend a Third Party Claim with counsel of its own choosing. Receipt by the Other Party of the notice and copies required in this paragraph and meaningful opportunity for the Other Party to participate in the investigation, defense and settlement of the Third Party Claim with counsel of its own choosing are conditions precedent to the Other Party's liability with respect to the Third Party Claim.

b. With respect to a Third Party Claim for which the State is jointly liable with the County (or would be if joined in the Third Party Claim), the State shall contribute to the amount of expenses (including attorneys' fees), judgments, fines and amounts paid in settlement actually and reasonably incurred and paid or payable by the County in such proportion as is appropriate to reflect the relative fault of the State on the one hand and of the County on the other hand in connection with the events which resulted in such expenses, judgments, fines or settlement amounts, as well as any other relevant equitable considerations. The relative fault of the State on the one hand and of the County on the other hand shall be determined by reference to, among other things, the parties' relative intent, knowledge, access to information and opportunity to correct or prevent the circumstances resulting in such expenses, judgments, fines or settlement amounts. The State's contribution amount in any instance is capped to the same extent it would have been capped under Oregon law if the State had sole liability in the proceeding.

c. With respect to a Third Party Claim for which the County is jointly liable with the State (or would be if joined in the Third Party Claim), the County shall contribute to the amount of expenses (including attorneys' fees), judgments, fines and amounts paid in settlement actually and reasonably incurred and paid or payable by the State in such proportion as is appropriate to reflect the relative fault of the County on the one hand and of the State on the other hand in connection with the events which resulted in such expenses, judgments, fines or settlement amounts, as well as any other relevant equitable considerations. The relative fault of the County on the one hand and of the State on the other hand shall be determined by reference to, among other things, the parties' relative intent, knowledge, access to information and opportunity to correct or prevent the circumstances resulting in such expenses, judgments, fines or settlement amounts. The County's contribution amount in any instance is capped to the same extent it would have been capped under Oregon law if it had sole liability in the proceeding.

24. Limitation of Liabilities. EXCEPT FOR LIABILITY OF DAMAGES ARISING OUT OF OR RELATED TO SECTION 23 OF THIS EXHIBIT, NEITHER PARTY SHALL BE LIABLE TO THE OTHER FOR ANY INCIDENTAL OR CONSEQUENTIAL DAMAGES ARISING OUT OF OR RELATED TO THIS AGREEMENT. NEITHER PARTY SHALL BE LIABLE FOR ANY DAMAGES OF ANY SORT ARISING SOLELY FROM THE TERMINATION OF THIS AGREEMENT OR ANY PART HEREOF IN ACCORDANCE WITH ITS TERMS.

25. Ownership of Intellectual Property.

a. Except as otherwise expressly provided herein, or as otherwise provided by state or federal law, OYA will not own the right, title and interest in any intellectual property created or delivered by County or a Provider in connection with the Services. With respect to that portion of the intellectual property that the County owns, County grants to OYA a perpetual, worldwide, non-exclusive, royalty-free and irrevocable license, subject to any provisions in the Agreement that restrict or prohibit dissemination or disclosure of information, to (i) use, reproduce, prepare derivative works based upon, distribute copies of, perform and display the intellectual property, (ii) authorize third parties to exercise the rights set forth in Section 25.a(i) on OYA's behalf, and (iii) sublicense to third parties the rights set forth in Section 25a(i).

b. If state or federal law requires that OYA or County grant to the United States a license to any intellectual property or if state or federal law requires that OYA or the United States own the intellectual property, then County shall execute such further documents and instruments as OYA may reasonably request in order to make any such grant or to assign ownership in the intellectual property to the United States or OYA. To the extent that OYA

becomes the owner of any intellectual property created or delivered by County in connection with the Services, OYA will grant a perpetual, worldwide, non-exclusive, royalty-free and irrevocable license, subject to any provisions in the Agreement that restrict or prohibit dissemination or disclosure of information, to County to use, copy, distribute, display, build upon and improve the intellectual property.

c. County shall include in its Provider Contracts terms and conditions necessary to require that Providers execute such further documents and instruments as OYA may reasonably request in order to make any grant of license or assignment of ownership that may be required by federal or state law.

26. Force Majeure. Neither OYA nor County shall be held responsible for delay or default caused by fire, civil unrest, labor unrest, natural causes or war which is beyond the reasonable control of OYA or County, respectively. Each party shall, however, make all reasonable efforts to remove or eliminate such cause of delay or default and shall, upon the cessation of the cause, diligently pursue performance of its obligations under this Agreement.

27. HIPAA Compliance. To the extent applicable, County shall deliver Services in compliance with the Health Insurance Portability and Accountability Act and the federal regulations implementing the Act (collectively referred to as HIPAA). County shall comply and require all Providers to comply with the following:

a. Privacy and Security Of Individually Identifiable Health Information. Individually Identifiable Health Information about specific individuals is confidential. Individually Identifiable Health Information relating to specific individuals may be exchanged between County and OYA for purposes directly related to the provision of Services. However, County shall not use or disclose any Individually Identifiable Health Information about specific individuals in a manner that would violate any applicable privacy rules.

b. Consultation and Testing. If County reasonably believes that County's delivery of Services under this Agreement may result in a violation of HIPAA requirements, County shall promptly consult with OYA.

28. Criminal History Checks. The County shall ensure that any person having direct contact with OYA youth offenders under this Agreement has passed a criminal history check and meets the OYA's criminal history records check standards as set forth in OAR 416-800-0000 to 416-800-0095 before the person provides unsupervised services under this Agreement.

Any person that has not yet passed a criminal history check must be supervised by a person who has passed such a test and does meet such standards when having direct contact with OYA youth offenders under this Agreement.

29. Alternative Dispute Resolution. The parties should attempt in good faith to resolve any dispute arising out of this Agreement. This may be done at any management level, including at a level higher than persons directly responsible for administration of the agreement. In addition, the parties may agree to utilize a jointly selected mediator or arbitrator (for non-binding arbitration) to resolve the dispute short of litigation.

JUVENILE CRIME PREVENTION BASIC SERVICES AND DIVERSION SERVICES INTERGOVERNMENTAL AGREEMENT
EXHIBIT C
PROGRAM REQUIREMENTS

1. Outcomes. County shall develop and implement its Service Plan for Juvenile Crime Prevention Basic Services and Diversion Services with the goal of achieving the following high level outcomes:

a. Reduction of juvenile recidivism.

b. Reduction (or maintenance) in the use of beds in OYA's Close Custody Facilities by youth from County at a level at or below the Discretionary Bed Allocation.

2. Management of Discretionary Bed Allocation.

a. County shall use its best efforts to implement the Service Plan in such a manner that the number of youth from County residing in beds at OYA's Close Custody Facilities does not exceed, at any time during the term of this Agreement, the Discretionary Bed Allocation. The Discretionary Bed Allocation formula allows for the Discretionary Bed Allocation to change based upon the availability of discretionary beds at OYA's Close Custody Facilities. With the prior written approval of OYA, County may join a regional group of counties for purposes of managing its Discretionary Bed Allocation. If County joins such a group, County shall be deemed to have exceeded its Discretionary Bed Allocation under this Agreement only if the total number of youth, from all counties in the group, residing in beds at OYA's Close Custody Facilities exceeds the sum of the Discretionary Bed Allocation for each of the counties in the group.

b. If County exceeds its Discretionary Bed Allocation for ninety (90) or more consecutive days, OYA may, in its sole discretion, withhold all or a portion of the funds for Diversion Services until the County reduces its utilization to a level at or below the Discretionary Bed Allocation. County shall work with OYA through the Local Co-Management Agreement to meet the Discretionary Bed Allocation.

3. JCP Basic Services Target Population and Funded Services. County shall target its Basic Services to the Target Population for Basic Services.

a. JCP Basic Services Target Population are youths 10 to 17 years of age who have been referred to a County Juvenile Department and have more than one of the following risk factors:

(i) Antisocial behavior.
(ii) Poor family functioning or poor family support.
(iii) Failure in school.
(iv) Substance abuse problems.
(v) Negative peer associations.

b. JCP Basic Services funds provide primary County Juvenile Department services and sanctions that prevent the highest risk local youth offenders from re-offending in the community, including but not limited to, detention, shelter, treatment services, graduated sanctions, and aftercare.

4. Diversion Services Target Population and Funded Services. County shall target its Diversion Services to the Target Population for Diversion Services.

a. Diversion Target Population are youths 12 to 18 years of age who have been adjudicated for a Class A Misdemeanor or more serious act of delinquency and who have been identified to be at risk of commitment to OYA Close Custody Facility.

b. Diversion funds provide specialized services that prevent the highest risk local youth offenders from being committed to OYA Close Custody Facilities. The services may include, but not be limited to, the following:

(i) Detention and shelter services to the extent that they divert the target population from commitment to OYA Close Custody.

(ii) Youth-specific treatment, including substance abuse treatment, sex offender treatment, family-based treatment services, gang intervention services, mental health treatment, and other services.

5. Service Plan

a. Service Plan Submission. County shall submit a written JCP Basic Services and Diversion Services Plan in a format and within the timeline prescribed by OYA. County and OYA shall work in good faith to modify the draft Service Plan so that it is acceptable to both parties and approved by OYA. Upon agreement, County shall implement Services according to the agreed-upon Service Plan. The Service Plan on file with OYA on the effective date of this Agreement is the Service Plan for the 2013-2015 biennium. Until the Service Plan for the 2015-2017 biennium has been approved by the OYA and is on file with the OYA, the Service Plan for the 2013-2015 shall remain in effect and County shall continue to provide Services under that Plan; once the Service Plan for the 2015-2017 biennium has been approved by OYA and is on file with OYA, it shall replace the Service Plan for the 2013-2015 biennium and be incorporated into and be a part of this Agreement in accordance with Section 2 of this Agreement, without any further action on the part of the parties.

(i) The Service Plan shall include a budgeted amount for each service which will be the basis for the quarterly invoicing on OYA's prescribed format for Expenditure Reporting/Request For Payment as described in Exhibit B, Section 4.

(ii) All funded services under the Service Plan must focus on supporting the high level outcomes in Section 1 of this Exhibit C.

b. Service Plan Implementation. County shall implement, or through Providers shall require to be implemented, the JCP Basic Services and Diversion Services portions of the Service Plan as developed in 5.a. of this Section.

c. **Evidence-Based Services and Programs**. County shall work with OYA to develop a process to ensure that programs and services funded under this Agreement are appropriate and workable and meet the guidelines of evidence-based programs and cost effectiveness. County shall work with OYA to develop a reporting process on County's evidence-based programs and services funded under this Agreement. County shall submit to OYA such reports on County's evidence-based programs and services funded under this Agreement at such frequency as may be requested by OYA.

6. Cultural Competency. County shall deliver all Services and require all Providers to deliver Services in a culturally competent and gender appropriate manner.

7. Amendment to Service Plan

All amendments to the Service Plan shall be in a format prescribed by OYA. County must obtain OYA approval for any amendment that makes any significant change in the Service Plan. A significant change in the Service Plan includes but is not limited to any funding change in the categories of services outlined in the Service Plan. For the purposes of this Section 7, JCP Basic Services and Diversion Services are deemed separate funding sources. County shall follow the following requirements if it desires to change the Service Plan:

a. The Service Plan budget may be amended to change allocations between JCP Basic Services and Diversion Services or categories of services within a funding source while staying within the not-to-exceed Grand Total listed in Exhibit E.

b. County shall submit to OYA for review and approval any change(s) to the Service Plan budget aggregating 10% or greater of the total original budget for either of the funding sources listed in Exhibit E, counting the requested change and all previous changes to the Service Plan budget. Any such change(s) will not be effective without OYA's prior written approval.

c. County shall submit written notification to OYA for any change(s) to the Service Plan budget aggregating less than 10% of the total original budget for either of the funding sources listed in Exhibit E, counting the requested change and all previous changes to the Service Plan budget. This notification shall contain the substance of the change(s) and will be reviewed by OYA.

d. All changes to the Service Plan budget which comply with Sections 7.a and 7.b, or that comply with Sections 7.a and 7.c, shall be on file with OYA and shall become a part of the Service Plan and this Agreement from the effective date of the budget amendment without the necessity of executing a formal amendment to this Agreement. For purposes of this Section, the effective date of a Service Plan budget amendment is the date the Service Plan budget amendment is approved or notification is received by OYA, as applicable.

8. Grievance System. During the term of this Agreement, County shall establish and operate a system through which Clients receiving Services, and the Clients' parents or guardians, may present grievances about the delivery of the Services. At the time arrangements are made for delivery of Services to a particular Client, County shall advise the Client and the parents or guardian of the Client of the existence of this grievance system. County shall notify OYA of all unresolved grievances.

9. Reporting and Documentation

a. During the term of this Agreement, County shall provide OYA with the necessary service information to track treatment and accountability services in JJIS, as defined by JJIS policy "Service Tracking in JJIS" as it may be from time to time amended, or by service extracts, for progress in achieving the high level outcomes. This information provision requirement also applies to providing information on funded services not tracked in JJIS.

b. In addition to the other reporting requirement of this Agreement, during the term of this Agreement, the County shall ensure that all OYA required data fields are entered into JJIS.

c. If the County fails to meet any of the reporting requirements, OYA may conduct a performance review of the County's efforts under the Service Plan in order to identify ways in which the Service Plan may be improved. If, upon review, OYA determines that there are reasonable grounds to believe that County is not in substantial compliance with the Service Plan or this Agreement, OYA may notify the County regarding the alleged noncompliance and offer technical assistance, which may include peer review or other assistance, to reach such compliance. Nothing in this Section shall be construed to limit or restrict any OYA right arising out of County's default, as described in Exhibit B.

10. Youth Specific Reporting and Required Documentation

a. For all youth from County committed to OYA for community placement or placement in a Close Custody Facility during the term of this Agreement, the County must provide the following to OYA at the time of commitment:

(i) A reformation plan or case plan that has been approved by OYA. County shall ensure that the reformation plan or case plan accompanies the youth from the County at the time of commitment to OYA for community placement or placement in a Close Custody Facility.

(ii) Risk data derived from either a JCP Risk Screen tool or the OYA Risk/Needs Assessment tool.

(iii) Documentation of any mental health treatment;

(iv) Past and current prescribed psychotropic medication history;

(v) Past and existing suicidal ideation and behaviors;

(vi) All other information known to the County of behaviors that may be a risk of harm to youth offender or others;

(vii) Documentation of any medical information or developmental disability that might affect youth offender's ability to participate in activities or treatment.

b. County shall enter all youth specific service data in JJIS that is required for tracking services under this Agreement.

11. Other Agreement Requirements.

a. At a minimum, the County shall ensure the following processes are available to support the Service Plan:

(i) Disposition of parole violations;

(ii) Community Programs;

(iii) Plan for providing detention back-up and back up to Community Programs;

(iv) A process for making Close Custody Facility placement and parole decisions in accordance with the Service Plan, specifically the Diversion Services portion of the Service Plan;

(v) Programs and services used by the County to stay within its Discretionary Bed Allocation.

(vi) Revocation Hearings in the community prior to returning a youth to a bed at an OYA Close Custody Facility. County shall provide the hearing report to the Close

Custody Facility in which the youth resides within 72 hours after the youth's arrival at the Close Custody Facility. County shall ensure that the hearings are conducted in accordance with OAR 416-300-0000 et seq. and other applicable state and federal law.

JUVENILE CRIME PREVENTION BASIC SERVICES AND DIVERSION SERVICES INTERGOVERNMENTAL AGREEMENT
EXHIBIT D
PROVIDER REQUIREMENTS

1. Indemnification by Providers

County shall take all reasonable steps to cause its Provider(s) that are not units of local government as defined in ORS 190.003, if any, to indemnify, defend, save and hold harmless the State of Oregon and its officers, employees and agents ("Indemnitee") from and against any and all claims, actions, liabilities, damages, losses, or expenses (including attorneys' fees) arising from a tort (as now or hereafter defined in ORS 30.260) caused, or alleged to be caused, in whole or in part, by the negligent or willful acts or omissions of County's Provider or any of the officers, agents, employees or subcontractors of the Provider("Claims"). It is the specific intention of the parties that the Indemnitee shall, in all instances, except for Claims arising solely from the negligent or willful acts or omissions of the Indemnitee, be indemnified by the Provider from and against any and all Claims.

2. Provider Insurance Requirements

A. GENERAL.

County shall require its first tier Provider(s) that are not units of local government as defined in ORS 190.003, if any, to: i) obtain insurance specified under TYPES AND AMOUNTS and meeting the requirements under ADDITIONAL INSURED, "TAIL" COVERAGE, NOTICE OF CANCELLATION OR CHANGE, and CERTIFICATES OF INSURANCE before the Providers perform under contracts between County and the Providers (the "Provider Contracts"), and ii) maintain the insurance in full force throughout the duration of the Provider Contracts. The insurance must be provided by insurance companies or entities that are authorized to transact the business of insurance and issue coverage in the State of Oregon and that are acceptable to Agency. County shall not authorize Providers to begin work under the Provider Contracts until the insurance is in full force. Thereafter, County shall monitor continued compliance with the insurance requirements on an annual or more frequent basis. County shall incorporate appropriate provisions in the Provider Contracts permitting it to enforce Provider compliance with the insurance requirements and shall take all reasonable steps to enforce such compliance. Examples of "reasonable steps" include issuing stop work orders (or the equivalent) until the insurance is in full force or terminating the Provider Contracts as permitted by the Provider Contracts, or pursuing legal action to enforce the insurance requirements. In no event shall County permit a Provider to work under a Provider Contract when the County is aware that the Provider is not in compliance with the insurance requirements. As used in this section, a "first tier" Provider is a contractor with which the county directly enters into a contract. It does not include a subcontractor with which the Provider enters into a contract.

B. TYPES AND AMOUNTS.

i. WORKERS COMPENSATION. Insurance in compliance with ORS 656.017, which requires all employers that employ subject workers, as defined in ORS 656.027, to provide workers' compensation coverage for those workers, unless they meet the requirement for an exemption under ORS 656.126(2). Employers Liability insurance with coverage limits of not less than $500,000 must be included.

ii. PROFESSIONAL LIABILITY

☒ Required by Agency ☐ Not required by Agency.

Professional Liability Insurance covering any damages caused by an error, omission or negligent act related to the services to be provided under the Provider Contract, with limits not less than the following, as determined by the Agency:

☐ $4,000,000 [for contracts ending on or before July 1, 2013. For contracts ending after that date, Agency to contact DAS Risk Management for the appropriate amount] per occurrence (for all claimants for claims arising out of a single accident or occurrence).

OR

☒ The amount per occurrence (for all claimants for claims arising out of a single accident or occurrence) according to the type of service for which County is subcontracting and at the amount shown on the published OYA Insurance Requirements for Contractors. The Insurance Requirements document is available at http://www.oregon.gov/OYA/contracts.shtml.

iii. COMMERCIAL GENERAL LIABILITY.

☒ Required by Agency ☐ Not required by Agency.

Commercial General Liability Insurance covering bodily injury, death, and property damage in a form and with coverages that are satisfactory to the Agency. This insurance shall include personal injury liability, products and completed operations. Coverage shall be written on an occurrence form basis, with not less than the following amounts as determined by the Agency:

Bodily Injury, Death and Property Damage:

☐ $4,000,000 [for contracts ending on or before July 1, 2013. For contracts ending after that date, Agency to contact DAS Risk Management for the appropriate amount]

per occurrence (for all claimants for claims arising out of a single accident or occurrence).

OR

☒ The amount per occurrence (for all claimants for claims arising out of a single accident or occurrence) according to the type of service for which County is subcontracting and at the amount shown on the published OYA Insurance Requirements for Contractors. The Insurance Requirements document is available at http://www.oregon.gov/OYA/contracts.shtml.

iv. AUTOMOBILE LIABILITY INSURANCE.

☒ Required by Agency ☐ Not required by Agency.

Automobile Liability Insurance covering all owned, non-owned and hired vehicles. This coverage may be written in combination with the Commercial General Liability Insurance (with separate limits for "Commercial General Liability" and "Automobile Liability"). Automobile Liability Insurance must be in not less than the following amounts as determined by the Agency:

Bodily Injury, Death and Property Damage:

☐ $4,000,000 [for contracts ending on or before July 1, 2013. For contracts ending after that date, Agency to contact DAS Risk Management for the appropriate amount] per occurrence (for all claimants for claims arising out of a single accident or occurrence).

OR

☒ The amount per occurrence (for all claimants for claims arising out of a single accident or occurrence) according to the type of service for which County is subcontracting and at the amount shown on the published OYA Insurance Requirements for Contractors. The Insurance Requirements document is available at http://www.oregon.gov/OYA/contracts.shtml.

C. ADDITIONAL INSURED. If the total amount payable under the Provider Contract is greater than $15,000.00, the Commercial General Liability insurance and Automobile Liability insurance must include the State of Oregon, its officers, employees and agents as Additional Insureds but only with respect to the Provider's activities to be performed under the Provider Contract. Coverage must be primary and non-contributory with any other insurance and self-insurance.

D. "TAIL" COVERAGE. If any of the required insurance policies is on a "claims made" basis, such as professional liability insurance, the Provider shall maintain either “tail" coverage or continuous "claims made" liability coverage, provided the effective date of the continuous “claims made” coverage is on or before the effective date of the Provider Contract, for a minimum of 24 months following the later of : (i) the Provider’s completion and County ’s acceptance of all Services required under the Provider Contract or, (ii) the expiration of all warranty periods provided under the Provider Contract. Notwithstanding the foregoing 24-month requirement, if the Provider elects to maintain “tail” coverage and if the maximum time period “tail” coverage reasonably available in the marketplace is less than the 24-month period described above, then the Provider may request and Agency may grant approval of the maximum “tail “ coverage period reasonably available in the marketplace. If Agency approval is granted, the Provider shall maintain “tail” coverage for the maximum time period that “tail” coverage is reasonably available in the marketplace.

E. NOTICE OF CANCELLATION OR CHANGE. The Provider or its insurer must provide 30 days’ written notice to County before cancellation of, material change to, potential exhaustion of aggregate limits of, or non-renewal of the required insurance coverage(s).

F. CERTIFICATE(S) OF INSURANCE. County shall obtain from the Provider a certificate(s) of insurance for all required insurance before the Provider performs under the Provider Contract. The certificate(s) or an attached endorsement must specify: i) all entities and individuals who are endorsed on the policy as Additional Insured and ii) for insurance on a “claims made” basis, the extended reporting period applicable to “tail” or continuous “claims made” coverage.

JUVENILE CRIME PREVENTION BASIC SERVICES AND DIVERSION SERVICES INTERGOVERNMENTAL AGREEMENT
EXHIBIT E
FUNDING

SERVICE	**TOTAL**
DIVERSION	$105,476.00
JCP BASIC	$124,275.00
GRAND TOTAL	$229,751.00

The amounts indicated as the Grand Total above represents the maximum amount that OYA may pay to County under this Agreement. This amount is not a firm, fixed amount unconditionally guaranteed to be provided to County, but is a not-to-exceed amount expected to be available for allowable payments to County for performing the Services set forth in the Service Plan and other provisions of this Agreement. The specific amounts allocated for Diversion Services and JCP Basic Services above are not firm, fixed amounts, but are subject to change as provided in Sections 11 and 20 of Exhibit B and Section 7 of Exhibit C. Changes to the amounts allocated for Diversion Services and JCP Basic Services made pursuant to Section 7 of Exhibit C shall not alter the not-to-exceed amount of the Grand Total listed above.

In compliance with the Americans with Disabilities Act, this document is available in alternate formats such as Braille, large print, audio tape, oral presentation, and computer disk. To request an alternate format call the State of Oregon, Oregon Youth Authority, Budget and Contracts Unit at (503) 373-7371.

STATE OF OREGON
INTERGOVERNMENTAL AGREEMENT
Individualized Services

Agreement # 13195

This Agreement is between the State of Oregon, acting by and through its **OREGON YOUTH AUTHORITY**, hereafter called "**OYA**" or "**Agency"**, and **COLUMBIA COUNTY**, hereafter called **"County"**.

Agency's **Contract Administrator** for this Agreement is: Philip Cox Phone Number: (503) 373-7531
Address: 530 Center St NE, Suite 200, Salem, Oregon 97301

1. Effective Date and Duration. This Agreement shall become effective as of **July 1, 2015.** Unless extended or terminated earlier in accordance with its terms, this Agreement shall terminate when Agency accepts County's completed performance or on **June 30, 2017**, whichever date occurs first. Agreement termination shall not extinguish or prejudice Agency's right to enforce this Agreement with respect to any default by County that has not been cured.

2. Statement of Work. County shall perform the work (the "Work" or "Service") as set forth in the Statement of Work, which includes the delivery schedule for such Work, and that is attached hereto as Exhibit A. County shall perform the Work in accordance with the terms and conditions of this Agreement.

3. Consideration
a. The maximum, not-to-exceed compensation payable to County under this Agreement, which includes any allowable expenses, is **$13,842.00**. Agency will not pay County any amount in excess of the not-to-exceed compensation of this Agreement for completing the Work, and will not pay for Work performed before the date this Agreement becomes effective or after the termination of this Agreement. If the maximum compensation is increased by amendment of this Agreement, the amendment must be fully effective before County performs Work subject to the amendment.
b. Interim payments to County shall be subject to ORS 293.462, and shall be made in accordance with the payment schedule and requirements in Exhibit A.
c. Agency will pay only for completed Work that is accepted by Agency.

4. Documents. This Agreement consists of the following documents, which are listed in descending order of precedence: this Agreement less all exhibits, Exhibit A (the Statement of Work) and Exhibit B (Subcontractor Requirements). Exhibit A and B are attached hereto and incorporated herein by this reference.

5. Independent Contractor; Responsibility for Taxes and Withholding
a. County shall perform all Work as an independent contractor. The Agency reserves the right (i) to determine and modify the delivery schedule for the Work and (ii) to evaluate the quality of the Work Product, however, the Agency may not and will not control the means or manner of County's performance. County is responsible for determining the appropriate means and manner of performing the Work.
b. If County is currently performing work for the State of Oregon or the federal government, County by signature to this Agreement, represents and warrants that: County's Work to be performed under this Agreement creates no potential or actual conflict of interest as defined by ORS 244 and no statutes, rules or regulations of the state or federal agency for which County currently performs work would prohibit County's Work under this Agreement.
c. The parties agree and acknowledge that their relationship is that of independent contracting parties and that County is not an "officer", "employee", or "agent" of the Agency, as those terms are used in ORS 30.265 or otherwise.
d. County shall be responsible for all federal or state taxes applicable to compensation or payments paid to County under this Agreement and, unless County is subject to backup withholding, Agency will not withhold from such compensation or payments any amount(s) to cover County's federal or state tax obligations. County is not eligible

for any social security, unemployment insurance or workers' compensation benefits from compensation or payments paid to County under this Agreement, except as a self-employed individual.

6. Subcontracts, Successors, and Assignments

a. County may contract with a third person or entity (a "Subcontractor") for delivery of a particular Service or portion thereof (a "Subcontract"). County may permit a Subcontractor to subcontract with a third person or entity for delivery of a particular Service or portion thereof and such subcontractors shall also be considered Subcontractors for purposes of this Agreement and the subcontracts shall be considered Subcontracts for purposes of this Agreement. County shall not permit any person or entity to be a Subcontractor unless the person or entity holds all licenses, certificates, authorizations and other approvals required by applicable law to deliver the Service. County shall ensure that the Subcontract is in writing and contains all provisions of this Agreement necessary for County to comply with its obligations under this Agreement and applicable to the Subcontractor's performance under the Subcontract, including but not limited to, all provisions of this Agreement that expressly require County to require Subcontractor's compliance with respect thereto. County shall maintain an originally executed copy of each Subcontract at its office and shall furnish a copy of any Subcontract to the Agency upon request.

b. County shall not assign, delegate or transfer its interest in this Agreement without prior written approval of Agency. Any such assignment or transfer, if approved, is subject to such conditions and provisions as the Agency may deem necessary. No approval by the Agency of the assignment or transfer of interest shall be deemed to create any obligation of the Agency in addition to those set forth in the Agreement.

c. The provisions of this Agreement shall be binding upon and shall inure to the benefit of the parties hereto and their respective successors, and permitted assigns.

7. No Third Party Beneficiaries. The Agency and County are the only parties to this Agreement and are the only parties entitled to enforce its terms. The parties agree that County's performance under this Agreement is solely for the benefit of the Agency to assist and enable the Agency to accomplish its statutory mission. Nothing in this Agreement gives, is intended to give, or shall be construed to give or provide any benefit or right, whether directly, indirectly or otherwise, to third persons any greater than the rights and benefits enjoyed by the general public unless such third persons are individually identified by name herein and expressly described as intended beneficiaries of the terms of this Agreement.

8. Funds Available and Authorized; Payments. County shall not be compensated for Work performed under this Agreement by any other agency or department of the State of Oregon. Agency certifies that it has sufficient funds currently authorized for expenditure to finance the costs of this Agreement within the Agency's current biennial appropriation or limitation. County understands and agrees that Agency's payment of amounts under this Agreement is contingent on Agency receiving appropriations, limitations, allotments or other expenditure authority sufficient to allow Agency, in the exercise of its reasonable administrative discretion, to continue to make payments under this Agreement.

9. Representations and Warranties. County represents and warrants to Agency as follows:

a. Organization and Authority. County is a political subdivision of the State of Oregon duly organized and validly existing under the laws of the State of Oregon. County has full power, authority and legal right to make this Agreement and to incur and perform its obligation hereunder.

b. Due Authorization. The making and performance by County of this Agreement (1) have been duly authorized by all necessary action of County and (2) do not and will not violate any provision of any applicable law, rule, regulation, or order of any court, regulatory commission, board, or other administrative agency or any provision of County's charter or other organizational document and (3) do not and will not result in the breach of, or constitute a default or require any consent under any other agreement or instrument to which County is a party or by which County or any of its properties may be bound or affected. No authorization, consent, license, approval of, filing or registration with or notification to any other governmental body or regulatory or supervisory authority is required for the execution, delivery or performance by County of this Agreement.

c. Binding Obligation. This Agreement has been duly executed and delivered by County and constitutes a legal, valid and binding obligation of County, enforceable in accordance with its terms subject to the laws of bankruptcy, insolvency, or other similar laws affecting the enforcement of creditors' rights generally.

d. Accuracy of Information. The statements made in and the information provided in connection with any applications, requests or submissions to the State hereunder or in connection with any funding provided to County hereunder are true and accurate in all materials respects.

e. Services. The delivery of each Service will comply with the terms and conditions of this Agreement and meet the standards for such Service as set forth herein, including but not limited to, any terms, conditions, standards and requirements set forth in Exhibit A.

f. The warranties set forth above are in addition to, and not in lieu of, any other warranties set forth in this Agreement or implied by law.

10. Intellectual Property & Open Source

Definitions. As used in this Contract, the following terms have the meanings set forth below:
a. "Contractor Intellectual Property" means any intellectual property owned by County and developed independently from Services.
b. "Open Source Elements" means any Work Product subject to any open source initiative certified license, including Work Product based upon any open source initiative certified licensed work.
c. "Third Party Intellectual Property" means any intellectual property owned by parties other than Agency or County.
d. "Work Product" means all Services and Goods County delivers or is required to deliver to Agency pursuant to this Contract.

i. New Works. All intellectual property rights in the Work Product created by County under this Contract shall be the exclusive property of Agency. All Work Product authored by County under this Contract shall be deemed "works made for hire" to the extent permitted by the United States Copyright Act. To the extent Agency is not the owner of the intellectual property rights in such Work Product, County hereby irrevocably assigns to Agency any and all of its rights, title, and interest in such Work Product. Upon Agency's reasonable request, County shall execute such further documents and instruments reasonably necessary to fully vest such rights in Agency. County forever waives any and all rights relating to such Work Product created under this Contract, including without limitation, any and all rights arising under 17 USC §106A or any other rights of identification of authorship or rights of approval, restriction or limitation on use or subsequent modifications.

ii. Contractor Intellectual Property. If intellectual property rights in the Work Product are Contractor Intellectual Property, County hereby grants to Agency an irrevocable, non-exclusive, perpetual, royalty-free license to use, make, reproduce, prepare derivative works based upon, distribute copies of, perform and display the Contractor Intellectual Property, and to authorize others to do the same on Agency's behalf.

iii. Third Party Intellectual Property. To the extent County has the authority, County shall sublicense or pass through to Agency all Third Party Intellectual Property. County represents and warrants that it has provided written disclosure to Agency of all Third Party Intellectual Property that must be independently licensed by Agency to fully enjoy the benefit of the Work Product. If County failed to provide such written disclosure, County shall secure on the Agency's behalf and in the name of the Agency, an irrevocable, non-exclusive, perpetual, royalty-free license to use, make, reproduce, prepare derivative works based upon, distribute copies of, perform and display the Third Party Intellectual Property, and to authorize others to do the same on Agency's behalf.

iv. Open Source Approval and Notice. Any Open Source Elements in the Work Product must be approved in advance and in writing by Agency. If Agency approves the use of Open Source Elements, County shall:
a. Notify Agency in writing that the Work Product contains Open Source Elements;
b. Identify the specific portion of the Work Product that contain Open Source Elements; and
c. Provide a copy of the applicable license for each Open Source Element to Agency.

11. Contribution
a. If any third party makes any claim or brings any action, suit or proceeding alleging a tort as now or hereafter defined in ORS 30.260 ("Third Party Claim") against a party (the "Notified Party") with respect to which the other party ("Other Party") may have liability, the Notified Party must promptly notify the Other Party in writing of the Third Party Claim and deliver to the Other Party a copy of the claim, process, and all legal pleadings with respect to the Third Party Claim. Either party is entitled to participate in the defense of a Third Party Claim, and to defend a Third Party Claim with counsel of its own choosing. Receipt by the Other Party of the notice and copies required in this paragraph and meaningful opportunity for the Other Party to participate in the investigation, defense and settlement of the Third Party Claim with counsel of its own choosing are conditions precedent to the Other Party's liability with respect to the Third Party Claim.
b. With respect to a Third Party Claim for which the State is jointly liable with the County (or would be if joined in the Third Party Claim), the State shall contribute to the amount of expenses (including attorneys' fees), judgments,

fines and amounts paid in settlement actually and reasonably incurred and paid or payable by the County in such proportion as is appropriate to reflect the relative fault of the State on the one hand and of the County on the other hand in connection with the events which resulted in such expenses, judgments, fines or settlement amounts, as well as any other relevant equitable considerations. The relative fault of the State on the one hand and of the County on the other hand shall be determined by reference to, among other things, the parties' relative intent, knowledge, access to information and opportunity to correct or prevent the circumstances resulting in such expenses, judgments, fines or settlement amounts. The State's contribution amount in any instance is capped to the same extent it would have been capped under Oregon law if the State had sole liability in the proceeding.

c. With respect to a Third Party Claim for which the County is jointly liable with the State (or would be if joined in the Third Party Claim), the County shall contribute to the amount of expenses (including attorneys' fees), judgments, fines and amounts paid in settlement actually and reasonably incurred and paid or payable by the State in such proportion as is appropriate to reflect the relative fault of the County on the one hand and of the State on the other hand in connection with the events which resulted in such expenses, judgments, fines or settlement amounts, as well as any other relevant equitable considerations. The relative fault of the County on the one hand and of the State on the other hand shall be determined by reference to, among other things, the parties' relative intent, knowledge, access to information and opportunity to correct or prevent the circumstances resulting in such expenses, judgments, fines or settlement amounts. The County's contribution amount in any instance is capped to the same extent it would have been capped under Oregon law if it had sole liability in the proceeding.

12. Default; Remedies; Termination.

a. Default by County. County shall be in default under this Agreement upon the occurrence of any of the following events:

(i) County fails to perform, observe or discharge any of its covenants, agreements or obligations set forth herein, including but not limited to, County's failure to comply with the Individualized Services Referral form;

(ii) Any representation, warranty or statement made by County herein or in any documents or reports relied upon by Agency to measure the delivery of Services, the expenditure of funds or the performance by County is untrue in any material respect when made;

(iii) County (i) applies for or consents to the appointment of, or taking of possession by, a receiver, custodian, trustee, or liquidator of itself or all of its property, (ii) admits in writing its inability, or is generally unable, to pay its debts as they become due, (iii) makes a general assignment for the benefit of its creditors, (iv) is adjudicated a bankrupt or insolvent, (v) commences a voluntary case under the Federal Bankruptcy Code (as now or hereafter in effect), (vi) files a petition seeking to take advantage of any other law relating to bankruptcy, insolvency, reorganization, winding-up, or composition or adjustment of debts, (vii) fails to controvert in a timely and appropriate manner, or acquiesces in writing to, any petition filed against it in an involuntary case under the Bankruptcy Code, or (viii) takes any action for the purpose of effecting any of the foregoing; or

(iv) A proceeding or case is commenced, without the application or consent of County, in any court of competent jurisdiction, seeking (i) the liquidation, dissolution or winding-up, or the composition or readjustment of debts, of County, (ii) the appointment of a trustee, receiver, custodian, liquidator, or the like of County or of all or any substantial part of its assets, or (iii) similar relief in respect to County under any law relating to bankruptcy, insolvency, reorganization, winding-up, or composition or adjustment of debts, and such proceeding or case continues un-dismissed, or an order, judgment, or decree approving or ordering any of the foregoing is entered and continues unstayed and in effect for a period of sixty consecutive days, or an order for relief against County is entered in an involuntary case under the Federal Bankruptcy Code (as now or hereafter in effect).

b. Agency's Remedies for County's Default. In the event County is in default under Section 12.a, Agency may, at its option, pursue any or all of the remedies available to it under this Agreement and at law or in equity, including, but not limited to:

(i) termination of this Agreement under Section 12.e(ii)(D), (E), or (F);

(ii) withholding all monies due for Work and Work Products that County has failed to deliver within any scheduled completion dates or has performed inadequately or defectively;

(iii) initiation of an action or proceeding for damages, specific performance, or declaratory or injunctive relief;

(iv) exercise of its right of setoff.

These remedies are cumulative to the extent the remedies are not inconsistent, and Agency may pursue any remedy or remedies singly, collectively, successively or in any order whatsoever. If a court determines that County was not in default under Sections 12.a, then County shall be entitled to the same remedies as if this Agreement was terminated pursuant to Section 12.e(ii)(A), (B), or (C).

c. Agency Default. Agency shall be in default under this Agreement upon the occurrence of any of the following events:

(i) Agency fails to perform, observe or discharge any of its covenants, agreements, or obligations set forth herein; or

(ii) Any representation, warranty or statement made by Agency herein is untrue in any material respect when

made.

d. County's Remedies for Agency's Default. In the event Agency terminates the Agreement under Section 12.e(ii)(A), (B), or (C), or in the event Agency is in default under Section 12.c and whether or not County elects to exercise its right to terminate the Agreement under Section 12.e(i)(B), County's sole monetary remedy shall be (a) with respect to services compensable on an hourly basis, a claim for unpaid invoices, hours worked within any limits set forth in this Agreement but not yet billed, authorized expenses incurred and interest within the limits permitted under ORS 293.462, and (b) with respect to deliverable-based Work, a claim for the sum designated for completing the deliverable multiplied by the percentage of Work completed and accepted by Agency, less previous amounts paid and any claim(s) that Agency has against County. In no event shall Agency be liable to County for any expenses related to termination of this Agreement or for anticipated profits. If previous amounts paid to County exceed the amount due to County under this Section 12.d, County shall pay immediately any excess to Agency upon written demand.

e. Termination.

(i) County Termination.

(A)County may terminate this Agreement in its entirety for its convenience, upon 90 days advance written notice to the Agency.

(B)Upon 30 days advance written notice to Agency, if Agency is in default under this Agreement and such default remains uncured at the end of said 30 day period or such longer period, if any, as County may specify in the notice.

(C)Upon 45 days advance written notice to Agency, if County does not obtain funding, appropriations and other expenditure authorizations from County's governing body, federal, state or other sources sufficient to permit County to satisfy its performance obligations under this Agreement, as determined by County in the reasonable exercise of its administrative discretion.

(D)Immediately upon written notice to Agency, if Oregon statutes or federal laws, regulations or guidelines are modified, changed or interpreted in such a way that County no longer has the authority to meet its obligations under this Agreement.

(ii) Agency's Termination. Agency may terminate this Agreement in its entirety or may terminate its obligation to provide funds under any portion of this Agreement:

(A) Upon 90 days' advance written notice to County, if Agency determines, in its sole discretion, to end all or any portion of the funds to County under this Agreement.

(B) Upon 45 days written notice to County, if Agency does not obtain funding, appropriations and other expenditure authorizations from federal, state or other sources sufficient, in the exercise of Agency's reasonable administrative discretion, to meet the payment obligations of Agency under this Agreement.

(C) Immediately upon written notice if state or federal laws, regulations, or guidelines are modified changed or interpreted in such a way that the Agency does not have the authority to provide funds for one or more Services or no longer has the authority to provide the funds from the funding source it had planned to use.

(D) Upon 30 days advance written notice to County, if County is in default under this Agreement and such default remains uncured at the end of said 30 day period or such longer period, if any, as Agency may specify in the notice.

(E) Immediately upon written notice to County, if any license or certificate required by law or regulation to be held by County or a subcontractor to deliver a Service is for any reason denied, revoked, suspended, not renewed or changed in such a way that County or a subcontractor no longer meets requirements to deliver the Service. This termination right may only be exercised with respect to the particular group of Services impacted by loss of necessary licensure or certification.

(F) Immediately upon written notice to County, if Agency determines that County or any of its subcontractors have endangered or are endangering the health or safety of a Client or others.

(iii) Entire Agreement. Upon termination of this Agreement in its entirety, Agency shall have no further obligation to pay funds to County under this Agreement, whether or not Agency has paid to County all funds described in Exhibit A. Notwithstanding the foregoing, Agency shall make payments to reimburse County's for services provided prior to the effective date of termination where such services are authorized pursuant to this Agreement and are not disputed by Agency.

13. Limitation of Liabilities. EXCEPT FOR LIABILITY OF DAMAGES ARISING OUT OF OR RELATED TO SECTION 11, NEITHER PARTY SHALL BE LIABLE TO THE OTHER FOR ANY INCIDENTAL OR CONSEQUENTIAL DAMAGES ARISING OUT OF OR RELATED TO THIS AGREEMENT. NEITHER PARTY SHALL BE LIABLE FOR ANY DAMAGES OF ANY SORT ARISING SOLELY FROM THE TERMINATION OF THIS AGREEMENT OR ANY PART HEREOF IN ACCORDANCE WITH ITS TERMS.

14. Records Maintenance; Access. County shall maintain, and require all subcontractors to maintain, all financial records relating to this Agreement or any subcontractor contract in accordance with generally accepted

accounting principles. In addition, County shall maintain and require all subcontractors to maintain, any other records (including but not limited to statistical records) pertinent to this Agreement in such a manner as to clearly document County's and each subcontractor's performance. County acknowledges and agrees that Agency and the Oregon Secretary of State's Office and the federal government and their duly authorized representatives shall have access to such fiscal and statistical records and other books, documents, papers, plans and writings of County that are pertinent to this Agreement to perform examinations, audits and program reviews and make excerpts and transcripts. A copy of an audit or report will be made available to County. County shall retain and keep accessible all such fiscal and statistical records, books, documents, papers, plans, and writings for a minimum of six (6) years, or such longer period as may be required by applicable law, following final payment and termination of this Agreement, or until the conclusion of any audit, controversy or litigation arising out of or related to this Agreement, whichever date is later.

15. Compliance with Applicable Law. County shall comply and require all subcontractors to comply with all federal, state and local laws, regulations, executive orders and ordinances applicable to the Agreement or to the delivery of Services. Without limiting the generality of the foregoing, County expressly agrees to comply with the following laws, regulations and executive orders to the extent they are applicable to the Agreement: (i) Titles VI and VII of the Civil Rights Act of 1964, as amended; (ii) Sections 503 and 504 of the Rehabilitation Act of 1973, as amended; (iii) the Americans with Disabilities Act of 1990, as amended; (iv) Executive Order 11246, as amended; (v) the Health Insurance Portability and Accountability Act of 1996; (vi) the Age Discrimination in Employment Act of 1967, as amended, and the Age Discrimination Act of 1975, as amended; (vii) the Vietnam Era Veterans' Readjustment Assistance Act of 1974, as amended; (viii) ORS Chapter 659, as amended; (ix) all regulations and administrative rules established pursuant to the foregoing laws; and (x) all other applicable requirements of federal and state civil rights and rehabilitation statutes, rules and regulations. These laws, regulations and executive orders are incorporated by reference herein to the extent that they are applicable to the Agreement and required by law to be so incorporated. Agency's performance under the Agreement is conditioned upon County's compliance with the provisions of ORS 279B.220, 279B.230 and 279B.235, which are incorporated by reference herein. County shall, to the maximum extent economically feasible in the performance of this Agreement, use recycled paper (as defined in ORS 279A.010(1)(gg)), recycled PETE products (as defined in ORS 279A.010(1)(hh)), and other recycled products (as "recycled product" is defined in ORS 279A.010(1)(ii)).

16. Force Majeure. Neither Agency nor County shall be held responsible for delay or default caused by fire, civil unrest, labor unrest, natural causes, terrorist acts and other acts of political sabotage, and war which is beyond respectively, the Agency's or County's reasonable control. Each party shall, however, make all reasonable efforts to remove or eliminate such cause of delay or default and shall, upon the cessation of the cause, diligently pursue performance of its obligations under this Agreement.

17. Survival. All rights and obligations shall cease upon termination or expiration of this Agreement, except for the rights and obligations set forth in Sections 1, 7, 8, 9, 10, 11, 12, 13, 14, 17, 20, 21, 22 and 24.

18. Notice. Except as otherwise expressly provided in this Agreement, any communications between the parties hereto or notices to be given hereunder shall be given in writing, by personal delivery, facsimile, electronic mail, or mailing the same, postage prepaid, to County or Agency at the address or number set forth in this Agreement, or to such other addresses or numbers as either party may indicate pursuant to this Section 18. Any communication or notice so addressed and mailed shall be effective five (5) days after mailing. Any communication or notice delivered by facsimile shall be effective on the day the transmitting machine generates a receipt of the successful transmission, if transmission was during normal business hours of the recipient, or on the next business day, if transmission was outside normal business hours of the recipient. Any communication or notice delivered by electronic mail shall be effective on the day of notification of delivery receipt, if delivery was during normal business hours of the recipient, or on the next business day, if delivery was outside normal business hours of the recipient. Any communication or notice given by personal delivery shall be effective when actually delivered.

19. Severability. The parties agree that if any term or provision of this Agreement is declared by a court of competent jurisdiction to be illegal or in conflict with any law, the validity of the remaining terms and provisions shall not be affected, and the rights and obligations of the parties shall be construed and enforced as if the Agreement did not contain the particular term or provision held to be invalid.

20. Counterparts. This Agreement may be executed in several counterparts, all of which when taken together shall constitute one agreement binding on all parties, notwithstanding that all parties are not signatories to the same counterpart. Each copy of the Agreement so executed shall constitute an original.

21. Governing Law; Consent to Jurisdiction. This Agreement shall be governed by and construed in accordance with the laws of the State of Oregon without regard to principles of conflicts of law. Any claim, action, suit or proceeding (collectively, "Claim") between Agency (and/or any other agency or department of the State of Oregon) and County that arises from or relates to this Agreement shall be brought and conducted solely and exclusively within a Circuit Court in the State of Oregon; provided, however, if a Claim must be brought in a federal forum, then it shall be brought and conducted solely and exclusively within the United States District Court for the District of Oregon. In no event shall this Section be construed as a waiver by the State of Oregon of any form of defense or immunity, whether sovereign immunity, governmental immunity, immunity based on the eleventh amendment to the Constitution of the United States or otherwise, from any Claim or from the jurisdiction of any court. COUNTY, BY EXECUTION OF THIS AGREEMENT, HEREBY CONSENTS TO THE IN PERSONAM JURISDICTION OF SAID COURTS.

22. Integration and Waiver. This Agreement, including all of its Exhibits, constitutes the entire agreement between the parties on the subject matter hereof. There are no understandings, agreements, or representations, oral or written, not specified herein regarding this Agreement. The failure of either party to enforce any provision of this Agreement shall not constitute a waiver by that party of that or any other provision. The remedies provided herein are cumulative and not exclusive of any remedies provided by law.

23. Criminal History Checks: The Agency has statutory authority to access criminal offender information on all persons providing services under this Agreement (ORS 181.010, 420A.010 (11) and 420A.021).

24. Confidentiality of Information.
a. The use or disclosure by the County and its employees and agents of any information concerning a recipient of Services, for any purpose not directly connected with the administration of the County's responsibilities with respect to such Services, is prohibited, except on written consent of the person or persons authorized by law to consent to such use or disclosure. The County shall prohibit the use or disclosure by the County's subcontractors and their employees and agents of any information concerning a recipient of Services provided under the applicable subcontracts, for any purpose not directly connected with the administration of the County's or subcontractor's responsibilities with respect to such Services, except on written consent of the person or persons authorized by law to consent to such use or disclosure. All records and files shall be appropriately secured to prevent access by unauthorized persons. The County shall, and shall require its subcontractors to, comply with all appropriate federal and state laws, rules and regulations regarding confidentiality of client records.
b. Agency shall include a provision in its contracts with contractors who utilize information related to the Services provided under this Agreement for research purposes, providing that contractor and its subcontractors under that contract shall not release confidential information on individual youth for purposes unrelated to the administration of the contract or required by applicable law, and a provision that contractor or its subcontractors under that contract shall appropriately secure all records and files to prevent access by unauthorized persons.
c. County shall maintain and require all Providers to maintain a Client record for each youth that receives a Service.

25. County-Client Relationship. The County shall establish a system approved by Agency through which a youth and the youth's parents or guardian may present grievances about the operation of the County's service program. At the time arrangements are made for the County's services, the County shall advise the youth and parents or guardian of the youth of the existence of this grievance system. The County shall notify the Agency of all unresolved grievances.

26. Program Records, Controls, Reports and Monitoring Procedures. The County shall maintain program records including statistical records, and provide program records to the Agency at times and in the form prescribed by the Agency. The County shall establish and exercise such controls as are necessary to assure full compliance with the program requirements of this Agreement. The County also agrees that a program and facilities review (including meetings with youth, review of service records, review of policy and procedures, review of staffing ratios and job descriptions, and meetings with any staff directly or indirectly involved in the provision of services) may be conducted at any reasonable time by any or all of the following: state personnel, federal personnel, and other persons authorized by the Agency. The County shall cooperate fully with such reviews.

27. Mandatory Reporting: As required by Oregon Law (ORS 419B.005 through ORS 419B.050), all OYA contractors must immediately inform either the local office of the Department of Human Services (DHS) or a law enforcement agency when they have reasonable cause to believe that any child with whom the County comes in contact has suffered abuse, or that any person with whom the County comes in contact has abused a child. Oregon Law recognizes child abuse to include but not be limited to: physical injury; neglect or maltreatment; sexual abuse and sexual exploitation; threat of harm; mental injury; child selling.

Reports must be made immediately upon awareness of the incident. Contractors are encouraged to contact the local DHS office if any questions arise as to whether an incident meets the definition of child abuse.

28. Amendments. No amendment, waiver, consent, modification or change of terms of this Agreement shall bind either party unless in writing and signed by all the parties and no such amendment, waiver, consent, modification, or change of terms shall be effective until all approvals required by law have been obtained from the Department of Justice. Such amendment, waiver, consent, modification or change if made, shall be effective only in the specific instance and for the specific purpose given.

29. Headings. The headings and captions to sections of this Agreement have been inserted for identification and reference purposes only and shall not be used to construe the meaning or to interpret this Agreement.

30. Construction. The parties agree and acknowledge that the rule of construction that ambiguities in a written agreement are to be construed against the party preparing or drafting the agreement shall not be applicable to the interpretation of this Agreement.

31. **HIPAA Compliance**. To the extent applicable, County shall deliver Services in compliance with the Health Insurance Portability and Accountability Act and the federal regulations implementing the Act (collectively referred to as HIPAA). County shall comply and require all subcontractors to comply with the following:

a. Privacy and Security of Individually Identifiable Health Information. Individually Identifiable Health Information about specific individuals is confidential. Individually Identifiable Health Information relating to specific individuals may be exchanged between County and OYA for purposes directly related to the provision of Services. However, County shall not use or disclose any Individually Identifiable Health Information about specific individuals in a manner that would violate any applicable privacy rules.

b. Consultation and Testing. If County reasonably believes that County's delivery of Services under this Agreement may result in a violation of HIPAA requirements, County shall promptly consult with Agency.

32. Alternative Dispute Resolution
The parties should attempt in good faith to resolve any dispute arising out of this agreement. This may be done at any management level, including at a level higher than persons directly responsible for administration of the agreement. In addition, the parties may agree to utilize a jointly selected mediator or arbitrator (for non-binding arbitration) to resolve the dispute short of litigation.

//
//
//
//
//
//
//
//
//
//
//
//
//
//
//

COUNTY, BY EXECUTION OF THIS AGREEMENT, HEREBY ACKNOWLEDGES THAT COUNTY HAS READ THIS AGREEMENT, UNDERSTANDS IT, AND AGREES TO BE BOUND BY ITS TERMS AND CONDITIONS.

YOU WILL NOT BE PAID FOR SERVICES RENDERED PRIOR TO NECESSARY STATE APPROVALS

I hereby certify and affirm I am eligible and authorized to sign this agreement on behalf of the County.

By:_____Date:_____

Title:_____

Mailing Address:_____

_____

Facsimile:_____

AGENCY: STATE OF OREGON, acting by and through its Oregon Youth Authority

By:_____Date:_____
Shawn Waite, Chief Financial Officer

Mailing Address: 530 Center St. NE, Suite 200
Salem, Oregon 97301-3740
Facsimile: (503) 373-7921

Approved as to Legal Sufficiency by the **Attorney General's Office:** (Required if total amount owing under the Agreement, including amendments, exceeds $150,000)

By: **N/A** Date:_____
Assistant Attorney General

Reviewed by **OYA Contracts Specialist:**

By:_____Date:_____

EXHIBIT A
STATEMENT OF WORK

1. STATEMENT OF WORK:

1.1 Overview: Individualized services funds are intended to purchase services to meet widely varied needs, ranging from simple one-time services/purchases to complex, multi-disciplinary case management services necessary to keep a youth offender in the community, prevent commitment to Oregon Youth Authority (OYA or Agency) Probation and/or an OYA youth correctional facility, or revocation/recommitment of a youth offender to an OYA youth correctional facility. Funds are not intended for routine and ongoing costs that are already built in to other payment structures such as ongoing clothing needs, grooming needs, student body cards, etc. Rather, they are intended to fill in where other funding sources are unavailable because of the uniqueness of the need. The purchase shall directly support a need specifically itemized in a case/reformation plan. County shall research and use other resources before using Individualized services funds. Individualized services are intended to be based on evidence-based principles.

Individualized services provided by the County shall have a holistic approach across the following case plan domains:

a) Medical;
b) Mental Health;
c) Social Living Skills;
d) Alcohol and Drug Treatment;
e) Education;
f) Vocational;
g) Family; and
h) Offense specific.

Individualized services requested shall be:

a) case-plan driven and community based;
b) based on evidenced-based principles;
c) outcome oriented;
d) proactive in approach (not crisis driven); and
e) culturally competent and gender specific.

1.2 Eligibility: The County agrees to provide youth specific, comprehensive wrap around services for youth who are eligible for Individualized services funds. Eligible youth are those youth who have been adjudicated delinquent; are in need of services that **cannot** be funded through any other source, public or private, in any other way and services are case plan driven; and are determined to:

a) be at risk of commitment to the OYA; or
b) be at risk of commitment to an OYA youth correctional facility; or
c) be at risk of recommitment/revocation to an OYA youth correctional facility.

1.3 Supervising Representatives: The Supervising Representatives for purposes of this Agreement shall be:

AGENCY: Philip Cox, Assistant Director, Community Services
(503) 373-7531
530 Center Street NE, Suite 200, Salem, Oregon, 97301

COUNTY: Janet Evans, Director, Dept. of Community Corrections
(503) 397-0275
230 Strand St, St Helens, Oregon, 97051

Should a change in the Agency's or County's Supervising Representative become necessary, Agency or County will notify the other party of such change. Such change shall be effective without the necessity of executing a formal amendment to this Agreement.

1.4 Services: The County's juvenile department staff shall be responsible for providing services to youth offenders referred for services under this Agreement. All referrals shall be submitted and approved using the Individualized Services Referral form as identified in subsection 1.6 of this Exhibit A. The services provided under this Agreement must:

a) be youth specific;
b) provide direct support of the youth offender's specific case/reformation plan;
c) be utilized only when no other funding sources exist, public or private, for which the youth offender could qualify;
d) reflect a prudent expenditure of public funds and be within acceptable community norms;
e) present no threat to public safety; and
f) conform to the Agency's Individualized Services User Handbook. A copy of the Agency's Individualized Services User Handbook will be on file with the County and Agency.

1.5 Process: Individualized services expenditures must be approved in advance and in writing by a designee of the County and a designee of the Agency. The designee for both the County Juvenile Department and Agency shall be approved by the Agency's Supervising Representative of this Agreement.

1.6 Individualized Services Referral Form: Before any expenditures can be approved under this Agreement, the County, in consultation with the Agency, shall develop a form for each youth for whom Services are requested, titled "Individualized Services Referral" that shall be approved by the Agency Supervising Representative for authorization of services under this Agreement. The form shall include:

a) a statement that services are being provided under the terms of this Agreement;
b) youth offender's Juvenile Justice Information System (JJIS) number;
c) name of the youth offender;
d) youth offender's date of birth;
e) basis of jurisdiction;
f) the signature of the requestor;
g) case/reformation plan domain and objective and how the requested service will aid in the accomplishment of that plan;
h) a description of the services to be provided;
i) the service provider selected;
j) unit cost;
k) number of units;
l) the total dollar amount of the services being requested;
m) beginning and ending dates for which the services are to be delivered; and
n) the approval signatures from a designated representative of both the County and the Agency.

County shall keep the detailed Individualized Services Referral form on file with the County and available for Agency review for a period of 24 months after the end date of this Agreement.

1.7 Goals/Objectives: The goal of the expenditure of funds under this Agreement shall be to prevent the youth offender from further escalation into the Juvenile Justice System. Measurable progress toward these general goals shall be included in the synopsis as described in subsection 1.8 of this Exhibit A below. The goals for these funds include:

a) reduce commitments and revocations of youth offenders who can safely be managed in the community;
b) increase public safety by providing more appropriate services to youth offenders in the community;
c) increase positive reformation and evidenced-based reduction of risk;
d) decrease self-destructive behavior of youth offenders served;
e) increase educational participation of youth offenders served;
f) reduce the propensity of youth offenders to commit crimes;
g) increase the skills of youth offenders to appropriately live in a community setting; and
h) reduce the propensity of a youth offender to engage in antisocial behavior.

1.8 Synopsis: The County shall provide the Agency, on a monthly or quarterly basis, a synopsis of youth offenders who have been approved for the Individualized services funds during the previous month or quarter. The expenditure of Individualized service funds is directly related to the youth offender's case/reformation plan.

All of the information required in the synopsis is available in the youth offender's case/reformation plan. The synopsis shall include:

a) the youth offender's JJIS number;
b) the youth offender's status (OYA, Juvenile Department);
c) the risk score from the Agency's adopted risk tool or the Oregon JCP Screen/Assessment instrument;
d) the date(s) services were provided;
e) the type of service authorized for the youth offender;
f) the service provider;
g) the total amount expended for the youth offender; and
h) a brief description of what domain and objective from the youth offender's case/reformation plan were met.

The synopsis shall be detailed and in the following format:

JJIS Number	Youth Status	Risk Score	Date(s) of Service	Type of Service	Service Provider	Amount Expended	Domain	Objective	OYA Agreement Number

All of the information required in the synopsis is available in the youth offender's case/reformation plan.

The County shall provide additional youth offender specific and service specific information upon request by the Agency. County shall send the synopsis monthly or quarterly attached to the invoice to the Oregon Youth Authority, Authorized Representative per Subsection 1.3 of this Exhibit A.

1.9 Survey/Report: The Agency is periodically required to report information on how the Individualized service funds are utilized. To meet this requirement the Agency may periodically request a report from the County that may include all or a portion of the information reported in the synopsis. The County shall provide this report upon the Agency's request.

1.10 Verification of Service: The County by submitting an invoice and synopsis for reimbursement is verifying that all services obtained for youth offenders under this Agreement have been provided as specified in the Individualized Services Referral form.

1.11 Other Funding Source Limits: Should a youth offender receiving services under this Agreement become eligible for services under any other private or public funding, then the services authorized by the Agreement for that specific youth offender shall be terminated and County shall not seek reimbursement for any future services so long as other funding exists.

1.12 Equal Access: The County agrees that there will be equal access to these funds for all adjudicated youths that have need for services under this Agreement. The County agrees that gender equity and diversity will be addressed appropriately and equitably.

1.13 Female Offenders: The Agency recognizes that female offender services continue to be more difficult to access; the use of Individualized services for female youth offenders will reflect services that offer specific and appropriate services for this population and employ service providers cognizant of female issues.

1.14 Evidence-Based Programs: County shall work with Agency to develop a process to ensure that programs and services funded under this Agreement are appropriate and workable and meet the guidelines of evidence-based programs and cost effectiveness as described under SB 267 (2003), ORS 182.515, as applicable. County shall work with Agency to develop a reporting process on County's evidence-based programs and services funded under this Agreement. County shall submit such reports to the Agency on County's evidence-based programs and services funded under this Agreement at such frequency as may be requested by Agency.

2. CONSIDERATION:

2.1 As consideration for the services provided by the County under this Agreement, the Agency, subject to the provision of ORS 293.462 (payment of overdue account charges) and the terms and conditions of this Agreement, will pay to the County, by warrant(s) an amount not to exceed **$13,842.00**.

2.2 The Agency reserves the right to deny payment for services provided that do not conform to the Agency's Individualized Services User Handbook, as may be revised from time to time.

2.3 Agency will reimburse County for all Allowable Costs that are authorized pursuant to this Agreement. "Allowable Costs" are defined as those costs which are reasonable and necessary for delivery of services under this Agreement, determined in accordance with 2 CFR Part 230 (Office of Management and Budget (OMB) Circular A 122) as revised from time to time.

2.4 It is agreed that any payment or reimbursement received by the County from a parent or guardian or any other personal entitlement received on behalf of any youth offender served under this Agreement shall be promptly remitted by the County to the Agency.

2.5 If the County allocates any indirect costs to this Agreement, the County shall make available to the Agency, upon request, a written cost allocation plan covering the handling and distribution of indirect costs. If all costs are direct costs to this Agreement, no cost allocation plan is required. In no event shall this subsection be construed to allow the County to require the Agency to pay any indirect costs allocated to this Agreement by County.

The County shall make available upon request by the Agency a monthly or quarterly detailed administrative financial report to support the actual monthly or quarterly administrative expenditures required under this Agreement.

2.6 The County agrees that the costs reimbursed by the Agency for services to youth offenders under this Agreement shall not exceed the costs for comparable services that are not covered by this Agreement.

2.7 The County will not impose or demand any fees from any person or agency (other than the Agency) for services provided and paid for under this Agreement, unless these fees have been approved in advance in writing by the Agency.

2.8 If, as a result of County's neglect or misconduct, the Agency terminates a youth offender's referral to the County under this Agreement, then the County shall no longer be entitled to reimbursement under this Agreement with respect to such youth offender after the date of such termination.

2.9 The County shall not use the funds provided hereunder to supplant money otherwise provided to the County Juvenile Department for services to delinquent youth.

3. PAYMENT:

3.1 County shall submit monthly or quarterly invoices with an attached synopsis as identified in subsection 1.8 of this Exhibit A, for Work performed for review and approval by the Agency. The invoices shall describe the Work performed and the total amount for that month or quarter. The invoices shall be provided on a form provided by the Agency. Copies of the invoices and receipts shall be retained by County for 24 months after the end date of this Agreement and shall be made available for review by Agency as described in subsection 3.5 of this Exhibit A. The invoices shall be prepared on Agency's form of invoice which County shall submit to: Oregon Youth Authority, Supervising Representative outlined in subsection 1.3 of this Exhibit A in accordance with Agency's instructions provided by Agency to County. Payment of any amount under this Agreement shall not constitute approval of the Work. The Agency's obligation to pay an invoice is conditioned upon the County providing the Agency with the synopsis specified in subsection 1.8 of this Exhibit A for the month or quarter for which payment is sought.

3.2 County shall not submit invoices for, and Agency will not pay, any amount in excess of the maximum compensation amount set forth above. If this maximum compensation amount is increased by amendment of this Agreement, the amendment must be fully effective before County performs services subject to the amendment. County shall notify Agency's Supervising Representative in writing thirty (30) calendar days before this Agreement expires of the upcoming expiration of the Agreement. No payment will be made for any services performed before the beginning date or after the expiration date of this Agreement, as it may be amended from time to time in accordance with its terms.

3.3 If payments to County by the Agency under this Agreement are made in error or are found by the Agency to be excessive under the terms of this Agreement, the Agency, after giving written notification to the County, may withhold payments due to County under this Agreement in such amounts, and over such periods of time, as are deemed necessary by the Agency to recover the amount of the overpayment. This subsection 3.3 shall survive expiration or earlier termination of this Agreement and be fully enforceable thereafter.

3.4 County must submit its final invoice to the Agency no later than sixty (60) days after the expiration date of this Agreement. The Agency shall be under no obligation to pay for services not billed within sixty (60) days after the expiration date of this Agreement.

3.5 The Agency reserves the right to periodically audit and review the actual expenses of the County for the following purposes:

1) To document the relation between the established payments under this Agreement and the amounts spent by the County.
2) To document that the amounts spent by the County are reasonable and necessary to assure quality service.
3) To assure that the County's expenses are allowable in accordance with 2 CFR Part 225 or 2 CFR Part 230 (Federal OMB Circulars A-87 or A-122, respectively) on Allowable Costs. In the event a periodic audit and review by the Agency shows that the County's expenses are not allowable under 2 CFR Part 225 or 2 CFR Part 230 (Federal OMB Circulars A-87 or A-122, respectively) on Allowable Costs in any material respect, Agency may terminate this Agreement.

3.6 In addition to any other rights accorded to the Agency under this Agreement, if the County fails to comply with the provisions of subsections 2.3, 2.4, 2.6, 2.7 and 3.5 above, the Agency may terminate this Agreement pursuant to Section 12 e.(ii)(D) and invoke the remedies available to it, exercise its rights under subsection 3.3 of this Exhibit A, or both. Nothing in this provision shall require County or Agency to act in violation of state or federal constitutions, statutes, regulations or rules. The rights and remedies set forth in this Agreement are not intended to be exhaustive and the exercise by either party of any right or remedy does not preclude the exercise of any other rights or remedies at law or in equity.

3.7 If the Oregon Legislative Assembly, Legislative Emergency Board or Oregon Department of Administrative Services increases or decreases the amount of money appropriated or allotted for implementation of the Services under this Agreement, OYA may, by written notice to County, unilaterally increase or decrease the amount of the funding in this Agreement. In such circumstances, if requested by either party, the parties shall execute an amendment to this Agreement reflecting an increase or decrease in the funding implemented under this Section. Nothing in this Section shall limit or restrict OYA's rights under this Agreement to suspend payment of funds or to terminate this Agreement as a result of a reduction in appropriations or allotments. Notwithstanding the order of precedence listed in Section 4 of this Agreement, this Subsection 3.7 of this Exhibit A takes precedence over all other provisions of this Agreement including all Exhibits.

4. AMENDMENT:

This Agreement may be amended one or more times by mutual agreement of the parties for time, money, terms, conditions, services, or any combination of the preceding. Any such amendment is not effective until approved by all parties and all necessary legal approvals have been obtained from the Department of Justice.

5. CONFLICT OF INTEREST

County shall notify Agency in writing when a current employee or newly hired employee is also an employee of the Agency. The notification shall be submitted to the Contract Administrator and the OYA Contracts unit and shall include the name of the employee and their job description. The Agency will review the employment situation for actual and potential conflicts of interest as identified under ORS Chapter 244.

6. EMERGENCY SUSPENSION/TERMINATION BY AGENCY

The parties understand and agree that under any of the following circumstances, without limitation, the Agency may remove or suspend a youth offender from services with the County immediately:

i. An allegation of child abuse/neglect or other conditions causing the Agency to determine that the youth offender's health, safety or welfare may be endangered; and
ii. An allegation of misconduct of County, County's employee or subcontractor causing the Agency to determine that the youth offender's health, safety or welfare may be endangered.

If as a result of County's alleged child abuse/neglect or misconduct, Agency suspends or terminates a youth offender's services with County in accordance with this Agreement, the County shall not be entitled to any compensation under this Agreement with respect to such youth from and after the date of such suspension or termination.

7. CRIMINAL HISTORY RECORDS CHECK

County shall ensure that, before any person provides services under this Agreement, the person has passed a criminal history check based on Agency's criminal history records check standards as set forth in OAR 416-800-0000 to 416-800-0095.

Any person that has not yet passed a criminal history check must be supervised by a person who has passed such a test and does meet such standards, when having direct contact with Agency youth offenders under this Agreement.

EXHIBIT B
SUBCONTRACTOR REQUIREMENTS

1. Indemnification by Subcontractors

County shall take all reasonable steps to cause its contractor(s) that are not units of local government as defined in ORS 190.003, if any, to indemnify, defend, save and hold harmless the State of Oregon and its officers, employees and agents ("Indemnitee") from and against any and all claims, actions, liabilities, damages, losses, or expenses (including attorneys' fees) arising from a tort (as now or hereafter defined in ORS 30.260) caused, or alleged to be caused, in whole or in part, by the negligent or willful acts or omissions of County's contractor or any of the officers, agents, employees or subcontractors of the contractor("Claims"). It is the specific intention of the parties that the Indemnitee shall, in all instances, except for Claims arising solely from the negligent or willful acts or omissions of the Indemnitee, be indemnified by the contractor from and against any and all Claims.

2. Subcontractor Insurance Requirements

A. GENERAL.

County shall require its first tier contractor(s) that are not units of local government as defined in ORS 190.003, if any, to: i) obtain insurance specified under TYPES AND AMOUNTS and meeting the requirements under ADDITIONAL INSURED, "TAIL" COVERAGE, NOTICE OF CANCELLATION OR CHANGE, and CERTIFICATES OF INSURANCE before the contractors perform under contracts between County and the contractors (the "Subcontracts"), and ii) maintain the insurance in full force throughout the duration of the Subcontracts. The insurance must be provided by insurance companies or entities that are authorized to transact the business of insurance and issue coverage in the State of Oregon and that are acceptable to Agency. County shall not authorize contractors to begin work under the Subcontracts until the insurance is in full force. Thereafter, County shall monitor continued compliance with the insurance requirements on an annual or more frequent basis. County shall incorporate appropriate provisions in the Subcontracts permitting it to enforce contractor compliance with the insurance requirements and shall take all reasonable steps to enforce such compliance. Examples of "reasonable steps" include issuing stop work orders (or the equivalent) until the insurance is in full force or terminating the Subcontracts as permitted by the Subcontracts, or pursuing legal action to enforce the insurance requirements. In no event shall County permit a contractor to work under a Subcontract when the County is aware that the contractor is not in compliance with the insurance requirements. As used in this section, a "first tier" contractor is a contractor with which the county directly enters into a contract. It does not include a subcontractor with which the contractor enters into a contract.

B. TYPES AND AMOUNTS.

i. WORKERS COMPENSATION. Insurance in compliance with ORS 656.017, which requires all employers that employ subject workers, as defined in ORS 656.027, to provide workers' compensation coverage for those workers, unless they meet the requirement for an exemption under ORS 656.126(2). Employers Liability insurance with coverage limits of not less than $500,000 must be included.

ii. PROFESSIONAL LIABILITY

☒ Required by Agency ☐ Not required by Agency.

Professional Liability Insurance covering any damages caused by an error, omission or negligent act related to the services to be provided under the Subcontract, with limits not less than the following, as determined by the Agency:

☐ $4,000,000 [for contracts ending on or before July 1, 2013. For contracts ending after that date, Agency to contact DAS Risk Management for the appropriate amount] per occurrence (for all claimants for claims arising out of a single accident or occurrence).

OR

☒ The amount per occurrence (for all claimants for claims arising out of a single accident or occurrence) according to the type of service for which County is subcontracting and at the amount shown on the published OYA Insurance Requirements for Contractors. The Insurance Requirements document is available at http://www.oregon.gov/OYA/contracts.shtml.

iii. COMMERCIAL GENERAL LIABILITY.

☒ Required by Agency ☐ Not required by Agency.

Commercial General Liability Insurance covering bodily injury, death, and property damage in a form and with coverages that are satisfactory to the Agency. This insurance shall include personal injury liability, products and completed operations. Coverage shall be written on an occurrence form basis, with not less than the following amounts as determined by the Agency:

Bodily Injury, Death and Property Damage:

☐ $4,000,000 [for contracts ending on or before July 1, 2013. For contracts ending after that date, Agency to contact DAS Risk Management for the appropriate amount] per occurrence (for all claimants for claims arising out of a single accident or occurrence).

OR

☒ The amount per occurrence (for all claimants for claims arising out of a single accident or occurrence) according to the type of service for which County is subcontracting and at the amount shown on the published OYA Insurance Requirements for Contractors. The Insurance Requirements document is available at http://www.oregon.gov/OYA/contracts.shtml.

iv. AUTOMOBILE LIABILITY INSURANCE.

☒ Required by Agency ☐ Not required by Agency.

Automobile Liability Insurance covering all owned, non-owned and hired vehicles. This coverage may be written in combination with the Commercial General Liability Insurance (with separate limits for “Commercial General Liability” and “Automobile Liability”). Automobile Liability Insurance must be in not less than the following amounts as determined by the Agency:

Bodily Injury, Death and Property Damage:

☐ $4,000,000 [for contracts ending on or before July 1, 2013. For contracts ending after that date, Agency to contact DAS Risk Management for the appropriate amount] per occurrence (for all claimants for claims arising out of a single accident or occurrence).

OR

☒ The amount per occurrence (for all claimants for claims arising out of a single accident or occurrence) according to the type of service for which County is subcontracting and at the amount shown on the published OYA Insurance Requirements for Contractors. The Insurance Requirements document is available at http://www.oregon.gov/OYA/contracts.shtml.

C. ADDITIONAL INSURED. If the total amount payable under the Subcontract is greater than $15,000.00, the Commercial General Liability insurance and Automobile Liability insurance must include the State of Oregon, its officers, employees and agents as Additional Insureds but only with respect to the contractor's activities to be performed under the Subcontract. Coverage must be primary and non-contributory with any other insurance and self-insurance.

D. "TAIL" COVERAGE. If any of the required insurance policies is on a "claims made" basis, such as professional liability insurance, the contractor shall maintain either “tail" coverage or continuous "claims made" liability coverage, provided the effective date of the continuous “claims made” coverage is on or before the effective date of the Subcontract, for a minimum of 24 months following the later of : (i) the contractor’s completion and County ’s acceptance of all Services required under the Subcontract or, (ii) the expiration of all warranty periods provided under the Subcontract. Notwithstanding the foregoing 24-month requirement, if the contractor elects to maintain “tail” coverage and if the maximum time period “tail” coverage reasonably available in the marketplace is less than the 24-month period described above, then the contractor may request and Agency may grant approval of the maximum “tail “ coverage period reasonably available in the marketplace. If Agency approval is granted, the contractor shall maintain “tail” coverage for the maximum time period that “tail” coverage is reasonably available in the marketplace.

E. NOTICE OF CANCELLATION OR CHANGE. The contractor or its insurer must provide 30 days’ written notice to County before cancellation of, material change to, potential exhaustion of aggregate limits of, or non-renewal of the required insurance coverage(s).

F. CERTIFICATE(S) OF INSURANCE. County shall obtain from the contractor a certificate(s) of insurance for all required insurance before the contractor performs under the Subcontract. The certificate(s) or an attached endorsement must specify: i) all entities and individuals who are endorsed on the policy as Additional Insured and ii) for insurance on a “claims made” basis, the extended reporting period applicable to “tail” or continuous “claims made” coverage.

OREGON WATERSHED ENHANCEMENT BOARD
SMALL GRANT PROJECT AGREEMENT

Grantee: Columbia Soil & Water Conservation District	**Grant Number:** 02-14-007

Project Name: Camp Wilkerson Trail Bridge

Award Amount: $10,000	**Project Completion Date:** 05/01/17

Fiscal Agent

Name: Malyssa Page
Organization: Columbia SWCD
Address: 35285 Millard Rd.
St. Helens, OR 97051
Phone: 503-397-4555 x100
Email: malyssa.page@columbiaswcd.com

Project Manager for the Grantee	**Project Manager for the Board**
Name: Tyler Joki	**Kathy Leopold**
Organization: Columbia SWCD	**OWEB**
Address: 35285 Millard Rd.	**775 Summer St. NE, Ste. 360**
St. Helens, OR 97051	**Salem OR 97301-1290**
Phone: 503-397-4555 x104	**503-986-0187**
Email: tyler.joki@columbiaswcd.com	**kathy.leopold@state.or.us**

This Grant Agreement is between the Oregon Watershed Enhancement Board, hereafter called "Board," and the Grantee as identified above, hereafter called "Grantee," in consideration of the mutual covenants contained herein. This Agreement consists of this signed document, the attached Exhibit A (Schedule for Release of Funds) and the grant application as approved by the Small Grant Team and consistent with the program Grant Agreement authorized by the Board.

A. Authorization

This grant is authorized by ORS 541.890 to 541.958, as amended by Oregon Laws 2011, chapter 643, and is subject to Oregon Administrative Rules 695-035-0010 to 695-035-0080, as such rules may periodically be amended by the Board.

B. Grant Award

The Grantee agrees to perform the project described in the Small Grant application and as specified in this Agreement, including without limitation in accordance with Sections C through Q of this Agreement. In return the Board agrees to payment of costs identified in the Agreement according to the *Schedule for Release of Funds* attached as Exhibit A.

The Grantee agrees that funds provided by the Board will only be used for the purposes specified in the grant application and as detailed in Exhibit A.

C. Term of Agreement

This Agreement will become effective upon signature by all parties. Any changes to the project must be approved before implementation and approved by all parties according to Section F, Amendments. The Project Completion Report is due within 60 days following grant completion. The Grantee will provide at least 25% non-Board match for the total amount of funding from the Board.

D. Funding Conditions

The Board's obligation to disburse funds to Grantee under this Agreement is subject to the Board having received, on the date of each disbursement, sufficient funding, appropriations, limitations, allotments, or other expenditure authority to allow the Board, in the exercise of its reasonable administrative discretion, to make each disbursement. Nothing in this Agreement entitles Grantee to receive payment under this Agreement from any part of Oregon state government other than the Board, and nothing in this Agreement is to be construed as permitting any violation of Article IX, section 7 of the Oregon Constitution or any other law regulating liabilities or monetary obligations of the State of Oregon.

As a condition for the disbursement of any Board funds, the Grantee agrees:

1. **Acknowledge Funding**
   (a) To provide a "funding partners" sign on the project site if the property is adjacent to a federal, state, county, or any other well-traveled road and is visible from the road.
   (b) To provide acknowledgement on any technical, educational or informational material produced through this project and distributed either in paper or electronic form that funding was provided by the Board.

2. **Obtain Necessary Permits and Licenses**
   (a) Prior to release of Board funds, to submit written evidence that all applicable permits and licenses from local, state, or federal agencies or governing bodies have been obtained or written evidence acceptable to the Board that permits and licenses are not required.

3. **Comply With Implementation Conditions**
   (a) To submit to the Board's Project Manager, before release of any Board funds, documentation that non-Board match has been secured as required by OAR 695-005-0060(3) and OAR 695-035-0040(8).
   (b) To notify the Board's Project Manager of any proposed change or modification of the project **prior** to implementation of the change or modification.
   (c) To comply with the Oregon Aquatic Habitat Restoration Guidelines under the Oregon Plan for Salmon and Watersheds.
   http://www.oregon.gov/OWEB/docs/pubs/habguide99-complete.pdf.
   (d) Inform the Board's Project Manager of any address changes.

4. **Document and Report Project Completion**
   (a) To submit to the Board's Project Manager all verifiable receipts, expenditure tracking sheet, and other accounting records throughout the term of this Agreement to document

expenditure of grant fund installments, and to account for all other funding, in-kind contributions and donations in the Project Completion Report.

(b) To submit within 60 days of completion of the project, and prior to the final disbursement of Board funds, a final project report to the Board's Project Manager and to the Small Grant Team. The report may be submitted in writing using the form provided on the website or electronically through OGMS.

http://www.oregon.gov/OWEB/GRANTS/pages/smgrant_forms.aspx
http://www.oregon.gov/OWEB/GRANTS/pages/final_report_guidance.aspx

The report will include:

(1) A narrative description of the project;

(2) Color photos with captions of the site after project completion; and

(3) The Oregon Watershed Restoration Inventory report (OWRI) completed and submitted online with the required map.
http://www.oregon.gov/OWEB/MONITOR/OWRI.shtml

(c) To abide by the project budget as presented in Exhibit A, (changes in line item amounts are permissible, with the exception of Grant Administration) unless the Grantee requests a budget amendment in writing and receives approval from the Board's Project Manager.

(d) To provide evidence satisfactory to the Board that match funds identified in the grant application have been received. Match must be at least 25% of the project award as required by OAR 695-035-0040(8).

(e) Submission and acceptance of a completion report and final request for release of funds will authorize OWEB to retain any remaining unspent funds.

E. Records Maintenance and Access

1. **Access to Records and Facilities.** The Board, the Secretary of State's Office of the State of Oregon and their duly authorized representatives will have access to the books, documents, papers and records of Grantee that are directly related to this Agreement, the grant moneys provided hereunder, or the project for the purpose of making audits and examinations. In addition, the Board, the Secretary of State's Office of the State of Oregon and their duly authorized representatives may make and retain excerpts, copies and transcriptions of the foregoing books, documents, papers and records. Grantee will permit authorized representatives of the Board, the Secretary of State's Office of the State of Oregon and their duly authorized representatives to perform site reviews of all services delivered as part of the project.

2. **Retention of Records.** Grantee will retain and keep accessible all books, documents, papers, and records that are directly related to this Agreement, the grant moneys or the project for a minimum of five (5) years, or such longer period as may be required by other provisions of this Agreement or applicable law, following termination or expiration of this Agreement. If there are unresolved audit questions or litigation at the end of the five-year period, Grantee will retain the records until the questions or litigation is resolved.

3. **Expenditure Records.** Grantee will document the expenditure of all grant moneys disbursed by the Board under this Agreement. Grantee will create and maintain all expenditure records in accordance with generally accepted accounting principles and in

sufficient detail to permit the Board to verify how the grant moneys were expended, including without limitation accounting for all other funds expended, as well as in-kind services and donated materials.

F. Amendments

Any modifications of this Agreement must be mutually agreed to in writing by all parties. **No time extensions, reinstatements or award amendments will be allowed.**

G. Assignment

The Grantee will not assign or transfer its interest in this Agreement without prior written approval from the Board.

H. Permission Required to Access Private Property; Access to Project Sites

In carrying out this Agreement, Grantee will not access any private property without first obtaining verbal or written consent from the landowner of the private property. Grantee will direct its contractors not to access private property without first obtaining verbal or written consent from the landowner of the private property.

Upon Board request, Grantee will seek the landowner's permission for mutually convenient access to the project site by Board members and their representatives for the purposes of evaluating project implementation, completion, post-implementation status or effectiveness.

I. Public Domain Information

Projects funded by this grant may be used in the collection of monitoring information on private lands about the effects of the project on aquatic or terrestrial conditions. Grantee acknowledges that all monitoring information obtained from private lands may become public information subject to the requirements of ORS 192.410 to 192.505.

J. Post-Implementation Maintenance and Post-Implementation Reports

Projects funded by the Board are intended to provide long-term benefits to the watershed. **The Landowner shall provide necessary and normal maintenance to sustain the value of the project once it is completed.**

Two years following project completion, Grantee will be required to submit a Year Two Status report (Post-Implementation) with color photos to the Board's Project Manager and to the Small Grant Team.
http://www.oregon.gov/OWEB/GRANTS/smgrant_forms.shtml

K. Termination of Grant Agreement

1. This Agreement may be terminated:

(a)At any time by mutual written consent of all parties,

(b) Upon written notice by the Board to Grantee for Grantee's failure to perform any other provision of this Agreement;

(c) Upon 30 days written notice by the Board to Grantee for any other reason specified in writing; or

(d) At any time, upon written notice by the Board, if the Board lacks sufficient funding, appropriations, limitations, allotments, or other expenditure authority to allow the

Board, in the exercise of its reasonable administrative discretion, to disburse the grant funds.

2. Within 30 days of termination, Grantee will return to the Board any unspent funds provided by the Board under this Agreement in accordance with Section P, Recovery of Grant Funds. The Board will reimburse the Grantee for authorized services performed and expenses incurred before termination under this Agreement.

L. Compliance With Applicable Law

Grantee shall comply with all federal, state and local laws, regulations, executive orders and ordinances applicable to this Agreement or to the project. Without limiting the generality of the foregoing, Grantee expressly agrees to comply with the following laws, regulations and executive orders to the extent they are applicable to the Agreement or the project: (a) all applicable requirements of state civil rights and rehabilitation statutes, rules and regulations, (b) Titles VI and VII of the Civil Rights Act of 1964, as amended, (c) Sections 503 and 504 of the Rehabilitation Act of 1973, as amended, (d) the Americans with Disabilities Act of 1990, as amended, (e) Executive Order 11246, as amended, (f) the Health Insurance Portability and Accountability Act of 1996, (g) the Age Discrimination in Employment Act of 1967, as amended, and the Age Discrimination Act of 1975, as amended, (h) the Vietnam Era Veterans' Readjustment Assistance Act of 1974, as amended, (i) all regulations and administrative rules established pursuant to the foregoing laws, and (j) all other applicable requirements of federal civil rights and rehabilitation statutes, rules and regulations. These laws, regulations and executive orders are incorporated by reference herein to the extent that they are applicable to the Agreement or the project and required by law to be so incorporated. Grantee shall not discriminate against any individual, who receives or applies for services as part of the project, on the basis of actual or perceived age, race, creed, religion, color, national origin, gender, disability, marital status, sexual orientation, age or citizenship. All employers, including Grantee, that employ subject workers who provide services in the State of Oregon shall comply with ORS 656.017 and provide the required Workers' Compensation coverage, unless such employers are exempt under ORS 656.126.

M. Grantee Authority

The individual signing on behalf of the Grantee hereby certifies and swears under penalty of perjury that s/he is authorized to act on behalf of Grantee, has authority and knowledge regarding Grantee's payment of taxes, and to the best of her/his knowledge, Grantee is not in violation of any Oregon tax laws.

N. Indemnity

Grantee will defend (subject to any limitation imposed by ORS Chapter 180), save, hold harmless, and indemnify the State of Oregon and the Board and their officers, employees and agents from and against all claims, suits, actions, losses, damages, liabilities, costs and expenses of any nature resulting from or arising out of, or relating to the activities of Grantee or its officers, employees, contractors, or agents under this Agreement or in the implementation of the project.

O. Designation of Forum

Any party bringing a legal action or proceeding against any other party arising out of or relating to this Agreement shall bring the legal action or proceeding in the Circuit Court of the State of Oregon for Marion County. Each party hereby consents to the exclusive jurisdiction of such court, waives any objection to venue, and waives any claim that such forum is an inconvenient forum.

P. Recovery of Grant Funds

Any funds disbursed to Grantee under this Agreement that are expended in violation or contravention of one or more of the provisions of this Agreement ("Misexpended Funds") or that remain unexpended on the earlier termination of this Agreement or grant completion ("Unexpended Funds") must be returned to the Board not later than 15 days after the Board's written demand.

Q. Reporting Requirements

Grantee will submit a Project Completion Report within 60 days of project completion to Board's Project Manager along with a final fund request.

Upon receipt of the report, OWEB has 90 days to a) approve the Project Completion Report or b) notify grantee of any concerns or missing information that must be submitted before the report is considered complete and reviewed for approval. The report is not considered complete until the Grantee has responded to OWEB's concerns and questions in a manner satisfactory to the OWEB Small Grant Program Coordinator and Fiscal Manager.

Approval of the Project Completion Report means that the report has been approved by the OWEB Small Grant Program Coordinator and the Fiscal Section has approved the Final Payment Request.

Grantee will also submit the required Year-Two Status Report as required by the Grant Agreement. Approval of the status report means that the report has been approved by the OWEB Small Grant Program Coordinator.

The Project Completion Report and any status report will show as "outstanding" on OGMS until the report has been approved by OWEB. New grant agreements will not be released to Grantee if Grantee has any outstanding reports.

THIS AGREEMENT, INCLUDING ALL MATERIALS INCORPORATED HERE BY REFERENCE, CONSTITUTES THE ENTIRE AGREEMENT BETWEEN THE PARTIES ON THIS SUBJECT. THERE ARE NO UNDERSTANDINGS, AGREEMENTS, OR REPRESENTATIONS, ORAL OR WRITTEN, NOT SPECIFIED HERE REGARDING THIS AGREEMENT. NO WAIVER, CONSENT, MODIFICATION, OR CHANGE OF TERMS OF THIS AGREEMENT SHALL BIND ANY PARTY UNLESS IN WRITING AND SIGNED BY ALL PARTIES. SUCH WAIVER, CONSENT, MODIFICATION, OR CHANGE, IF MADE, SHALL BE EFFECTIVE ONLY IN THE SPECIFIC INSTANCE AND FOR THE SPECIFIC PURPOSE GIVEN. FAILURE OF THE BOARD TO ENFORCE ANY PROVISION OF THIS AGREEMENT SHALL NOT CONSTITUTE A WAIVER BY BOARD OF THAT OR ANY OTHER PROVISION. GRANTEE, BY EXECUTING THIS AGREEMENT, HEREBY ACKNOWLEDGES THAT GRANTEE HAS READ THIS AGREEMENT, UNDERSTANDS IT AND AGREES TO BE BOUND BY ITS TERMS AND CONDITIONS.

AGREED:

FOR THE GRANTEE:

Grantee

6/17/2015

Date

FOR THE LANDOWNER:

Landowner

Date

FOR THE SMALL GRANT TEAM:

Small Grant Team

6/15/15

Date

FOR THE BOARD:

OWEB Grant Program Manager

Date

FOR THE FISCAL AGENT (if applicable):

Columbia SWCD

acting as Fiscal Agent, agrees to provide accounting services in accordance with the provisions of this agreement

Fiscal Agent

6/17/2015

Date

EXHIBIT A

SCHEDULE FOR RELEASE OF FUNDS

Total funds granted: **$10,000.00**

Note: 10% of the total grant funds will be withheld until submission of the final report [required by OAR 695-005-0060(8)]

1. Each Small Grant award will be disbursed in no more than two payments, using the Small Grant Request for Release of Funds form signed by the project's fiscal agent. OWEB will not pay for activities that were not covered under the project grant agreement or did not receive prior approval from the Board's Project Manager per OAR 695-035-0030(5).

2. Failure to comply with OWEB reporting requirements may delay new grants from being issued and may delay other grant payment requests. No additional funds will be released until all receipts for expenditures of previous fund releases are submitted to the Board. OAR 695-005-0060(7).

Project Budget

(Amounts should be rounded to the nearest dollar)

Expense Category	Amount
Salaries, Wages and Benefits	$4,253
Contracted Services	$0
Materials and Supplies	$4,883
Travel	$0
Other	$864
[redacted]	[redacted]
Grant Administration	$0
Post-Grant	$0
[redacted]	[redacted]

The final 10% of the grant ($851.50) will be released for payment upon receipt of all project expense documentation and acceptance of the Project Completion Report and Final Billing Request by the Board.

Project Completion Date: **May 1, 2017**